INDUSTRIAL GANTRY CRANES

SPANCO® Inc.

Promise to perform.

SPANCO GANTRY CRANES

SELECTOR GUIDE

Gantry Crane Type	T Series	A Series	Aluminum	E Series	PF Series	Single Leg	Wide-Flange
Key Features	Adjustable span, height & tread	Greater clear spans; adjustable height models	Lightweight, fast assembly & disassembly, adjustable	Economical, durable, dependable	High capacity, high height, long span	Maximized floor space	For specialized applications
Standard Capacities*	Up to 10 tons	Up to 10 tons	Up to 3 tons	Up to 5 tons	Up to 15 tons	Up to 15 tons	Up to 15 tons
Max Height	24′ *(OVERALL HEIGHT)*	16′ *(UNDER BEAM)*	12′ *(UNDER BEAM)*	14′ *(UNDER BEAM)*	35′ *(UNDER BEAM)*	35′ *(UNDER BEAM)*	35′ *(UNDER BEAM)*
Standard Spans*	Up to 40′	Up to 40′	Up to 20′	Up to 12′	Up to 50′	Up to 50′	Up to 55′
Powered Hoist/ Trolley Compatible	Yes	No	No	No	Yes	Yes	Yes
Power Travel Compatible	No	No	No	No	Yes	Yes	Yes
Key Options*	Cart Kit & Height Adjustment Kit	Steel w/ fixed or adjustable span; Aluminum w/ adjustable span	Pneumatic tires, single or dual	Adjustable height; wheel brakes	Trackless, angle guide, or V-groove track guidance	Single (semi), double leg, or wide-flange designs	Single (semi) or double leg designs; double girder option

**Additional custom capacities, spans, and options available. Contact your local Spanco dealer or call us at 800-869-2080.*

WHY SPANCO?

1. We carry the widest selection of pre-engineered, ready-to-ship gantry cranes in America.
2. We have the willingness and ability to custom engineer gantry solutions for your unique applications. Our business model readily handles "one-of-a-kind" design challenges.
3. Our engineers do comprehensive finite element analysis and destructive testing on all one-of-a-kind custom designs.
4. All of our gantry cranes — including custom engineered models — meet or exceed standards set by:
   - The Crane Manufacturers Association of America (CMAA)
   - The Occupational Safety and Health Administration (OSHA)
5. We deliver exceptional weld quality. Since our beginnings in 1979, all of our welders have be certified by the American Welding Society. In 2011, we earned AWS's prestigious Certified Welding Fabricator (CWF) designation for our comprehensive quality management systems that oversee our welding fabrication.
6. Our laser precision manufacturing ensures you that your gantry will operate smoothly and precisely for years to come.
7. We've embraced ISO 9001:2008 systems, especially as a means to monitor the quality of our interactions with customers, dealers, and reps.
8. All system proposals begin with an on-site evaluation of your material handling needs and expert recommendations by our trained Spanco dealers.
9. We don't play favorites: we engineer and manufacture a full portfolio of workstation lifting solutions — from Jib cranes to bridge cranes — so you can be assured that all of our system recommendations will be guided by your application's best interests.
10. Our cranes are delivered on-time and in the most thorough and protective packaging in the crane industry.
11. Our dealers provide continuous on-site technical support for all of our customers.
12. We offer comprehensive warranties: a ten year warranty on manual systems, and a one-year warranty on motorized systems.

Workers using two Motorized Spanco PF Gantry Cranes to load and transfer steel bundles.

A Spanco worker in Las Vegas welding the A-frame on an Aluminum Gantry Crane.

Note: the video icon in this brochure means you can see this crane in action at Spanco.com

SPANCO
GANTRY CRANES

GANTRY CRANE TABLE OF CONTENTS

2 **Spanco® Gantry Crane Selector Guide**

3 **Why Spanco?**

6 **The Ultimate in Crane Versatility**

8 **T Series**
Offers the greatest flexibility for adjusting gantry span, height, and tread. True A-frame gantry crane design.

14 **A Series**
No brace legs means greater clear spans. Adjustable height and span available.

20 **Aluminum**
As light as 120 pounds, fits in service trucks. Fast assembly. Adjustable span & height. Optional pneumatic tires.

22 **E Series**
Straightforward, economical gantry cranes meant for long service life. Made of high-strength, square mechanical tubing.

26 PF Series
High-capacity, high-height, long-span gantry cranes. Power drive options: V-groove track, guide angle, or truly trackless.

31 Single Leg
Semi gantries run on a single leg, with one end on the floor and the other overhead. Maximizes space; great for narrow, confined areas.

32 Wide-Flange
Our highest capacity cranes, made from Wide-Flange beams for specialized applications. Single or double leg designs.

34 Power Drive Kits
PF Series retrofit drive kits for high volume, high capacity gantry travel. V-groove track, guide angle, or trackless.

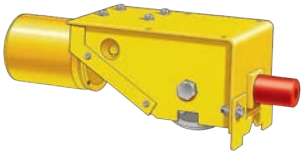

36 Tripod
Mobile, heavy-lifting solutions great for tight spaces and outdoor locations.

39 Spanco Warranty

SPANCO
GANTRY CRANES

THE ULTIMATE IN VERSATILITY & PORTABILITY

Moving and lifting heavy materials doesn't have to involve installing expensive equipment — or permanently changing your facility.

- Our gantry cranes are designed for quick assembly and disassembly, making them ideal for deploying and redeploying at rented facilities, or for sharing with multiple facilities.
- For travel over a fixed route, V-groove tracks and guide angles simply lag bolt to your existing floor.
- Our larger gantry cranes can be more cost-effective than bridge cranes in some heavy load applications. For example, when long distance travel (e.g., over 150 feet) would make bridge crane runways and foundations very expensive.
- Spanco Gantry Cranes can readily move loads from indoors to outdoors, or between buildings; weatherization options are available for outdoor use.

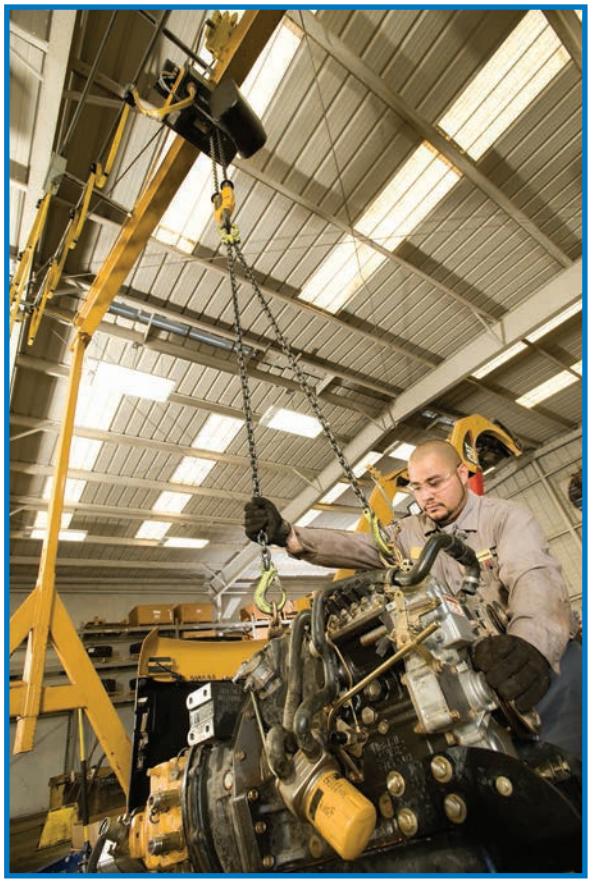

Spanco A Series Gantry Crane in action

AFFORDABLE LIFTING SOLUTIONS, FROM LARGE TO SMALL

Portable Gantry Cranes: Spanco T Series, A Series, Aluminum, and E Series Gantry Cranes can roll to all corners of your plant. Lift and move materials, or use for pulling motors, implements, and other heavy machinery.

Adjustable Gantry Cranes: Choose from Spanco T Series, A Series, Aluminum, and E Series Gantry Cranes based on your need to adjust height, span or tread. Our adjustable gantries let you move materials over uneven floors or through tight doorways and aisles. These adjustable models are popular in fabrication shops, warehouses, and wherever flexibility is required.

Fixed-Path Gantry Cranes: To keep your gantry cranes moving along a fixed route, add an angle guide or V-groove track.

Relocatable Gantry Cranes: Virtually all of our gantries are relocatable, making them ideal for future workflow changes.

UNSURPASSED PRECISION CRANE QUALITY

Spanco Gantry Cranes are unsurpassed in design strength, durability, and quality construction:

- Precision tolerances and welding for exact component alignment, smooth operation, superior stability, and long life.
- We only use standardized, quality American-made I-beams.
- All nuts, bolts, and pins are plated for corrosion resistance, and all gantry cranes are painted Spanco yellow.
- High-quality, long-lasting, non-marring, polyurethane-covered steel casters are standard on all of our gantry cranes. They easily withstand oil and most other chemicals, while providing smooth rolling performance — even on rough floors.
- Outdoor use options available, including exterior coatings and stainless steel motors.

A 'set-up site' manufacturer of light rail cars uses a 7.5-ton Spanco PF Motorized Gantry Crane to lift and move large drive train chassis through a long assembly process. Then, fiberglass shells are mounted onto the chassis using two 10-Ton Spanco T-Series Steel Adjustable Gantry Cranes. The cranes are used in tandem with a webbing sling to lift the shells onto the chassis. When they're finished with one project, the workers simply dissemble the cranes and move them to the next location.

Motorized Spanco PF Series Gantry Crane

A leading manufacturer of commercial modular buildings changed its production process and needed a way to handle 6500-pound bundles of steel. The steel's length and the plant's small size, made the use of Combilifts™ unsafe and inefficient. The low ceilings required a custom-engineered, application-specific, material handling solution: two small Spanco PF Motorized Gantry Cranes tied together with upper and lower steel channels and guided by double V-groove tracks. The local Spanco dealer provided turnkey installation.

Custom Motorized Spanco PF Series Gantry Crane System

GANTRY CRANES
T SERIES

THREE-WAY ADJUSTABILITY FOR EXTRAORDINARY VERSATILITY

Spanco® T Series Gantry Cranes offer three-way adjustability for span, height, and tread. Their adjustment flexibility allows use on uneven floors, as well as passage through doorways, aisles, and under mezzanines or other overhead obstacles.

Superior Stability: Superior engineering leaves the I-beam free to pivot as it self-centers over the load, while the "A" frame design keeps the rest of the crane perfectly stable. Main legs, brace legs, and caster frames are made of heavy-gauge, square tubing with zinc-plated hardware.

Adjustable Span: Our exclusive Spanloc™ design securely holds the I-beam in place during adjustments and when in use.

Cantilever Options: Deliver materials through the end of the gantry. Cantilever up to 25 percent of span (4-foot maximum) using a counterweight.

Adjustable Height: Adjust in 6-inch intervals using push/pull pins on the main legs.

Adjustable Tread: A cable assembly – bolted inside the caster frame tubes – prevents overspreading.

Heavy-Duty Casters: Four-position, swivel-lock casters with moldon polyurethane wheels protect floors from damage.

Manual Spanco T Series Gantry Crane operated in a cantilever configuration

SPANCO T SERIES GANTRY CRANES

T Series	Capacities	Heights Under I-Beam	Span Lengths*
All-Steel	Up to 10 tons	Up to 24′-3″	Up to 40′
Aluminum I-beam	Up to 3 tons	Up to 19′-8″	Up to 15′

**Longer custom spans available*

Dual Spanco T Series Gantry Cranes

OPTIONS FOR T SERIES GANTRY CRANES

Aluminum I-Beam: Significantly reduces gantry weight, particularly on higher-capacity cranes. Available up to 3-ton capacity with 10- or 15-foot spans..

Cart Kits: Attach to caster frames to transform the disassembled gantry into a transportable handcart.

Detachable Height Adjustment Kits: Convenient for frequent height adjustments. Eliminates the need for an overhead hoist or forklift truck. Kits consist of two units. Order two kits to eliminate transfer of kits from end to end. Use under no-load conditions only.

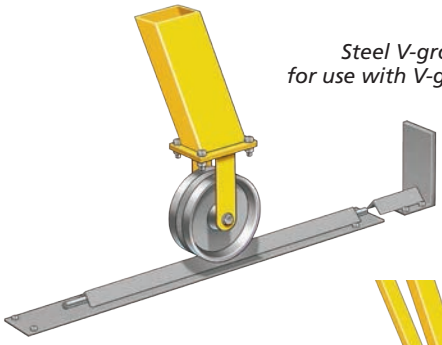

Steel V-groove casters for use with V-groove track

Caster Options:

- Wheel brakes on polyurethane casters
- Steel V-groove casters with rigid body for use on V-groove tracks
- Nylacron™ wheels available for easier movement on higher-capacity gantry cranes.

Detachable Height Adjustment Kit

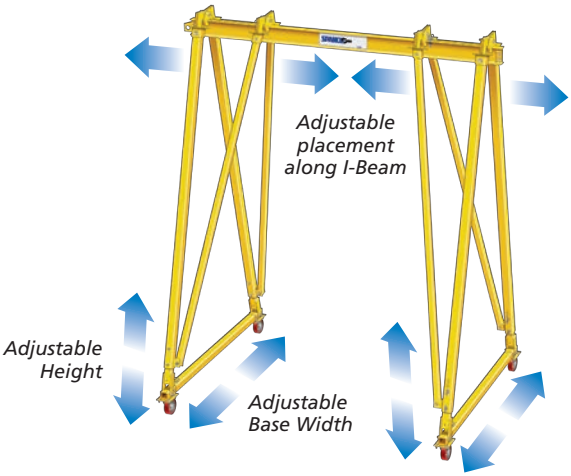

T Series Cart Kit

SPANCO GANTRY CRANES

T SERIES
All-Steel Construction

A CAPACITY	B SPAN	C CLEAR SPAN	D1 HEIGHT UNDER BEAM		D2 OVERALL HEIGHT		E1 BEAM SIZE	E2 FLANGE WIDTH	F CASTER FRAME SPREAD		G WHEEL DIA.	H MAX LEG CLEAR	NET WT (LBS.)	MODEL
			Min.	*Max.*	*Min.*	*Max.*			*Min.*	*Max.*				
1 TON	10′	5′ 1″	6′ 2″	9′ 6″	7′ 0″	10′ 4″	S6"X12.5#	3-3/8"	4′ 7″	7′ 1″	8″	10″	890	1T109S
		5′ 1″	7′ 6″	12′ 1″	8′ 5″	13′ 0″	S6"X12.5#	3-3/8"	6′ 2″	10′ 2″	8″	11″	997	1T1012S
		5′ 0″	9′ 9″	14′ 11″	10′ 7″	15′ 9″	S6"X12.5#	3-3/8"	6′ 2″	10′ 2″	8″	10″	1090	1T1015S
		5′ 0″	11′ 7″	18′ 1″	12′ 5″	18′ 11″	S6"X12.5#	3-3/8"	7′ 7″	13′ 1″	8″	11″	1302	1T1018S
		5′ 0″	14′ 0″	21′ 0″	14′10″	21′ 10″	S6"X12.5#	3-3/8"	7′ 7″	13′ 1″	8″	10″	1406	1T1021S
	15′	10′ 3″	6′ 0″	9′ 3″	7′ 0″	10′ 4″	S8"X18.4#	4"	4′ 7″	7′ 1″	8″	11″	1010	1T159S
		10′ 2″	7′ 4″	11′ 11″	8′ 5″	13′ 0″	S8"X18.4#	4"	6′ 2″	10′ 2″	8″	13″	1110	1T1512S
		10′ 1″	9′ 7″	14′ 9″	10′ 7″	15′ 9″	S8"X18.4#	4"	6′ 2″	10′ 2″	8″	11″	1204	1T1515S
		10′ 0″	11′ 5″	17′ 10″	12′ 5″	18′ 11″	S8"X18.4#	4"	7′ 7″	13′ 1″	8″	12″	1417	1T1518S
		10′ 0″	13′ 10″	20′ 10″	14′ 10″	21′ 10″	S8"X18.4#	4"	7′ 7″	13′ 1″	8″	11″	1520	1T1521S
	20′	15′ 3″	7′ 2″	11′ 9″	8′ 5″	13′ 0″	S10"X25.4#	4-5/8"	6′ 2″	10′ 2″	8″	13″	1406	1T2012S
		15′ 2″	9′ 5″	14′ 7″	10′ 7″	15′ 9″	S10"X25.4#	4-5/8"	6′ 2″	10′ 2″	8″	11″	1500	1T2015S
		15′ 1″	11′ 3″	17′ 9″	12′ 5″	18′ 11″	S10"X25.4#	4-5/8"	7′ 7″	13′ 1″	8″	12″	1710	1T2018S
		13′ 4″	13′ 8″	20′ 8″	14′ 10″	21′ 10″	S10"X25.4#	4-5/8"	7′ 7″	13′ 1″	8″	11″	1826	1T2021S
	25′	20′ 4″	7′ 2″	11′ 9″	8′ 6″	13′ 2″	S12"X31.8#	5"	6′ 2″	10′ 2″	8″	15″	2138	1T2512S
		20′ 2″	9′ 5″	14′ 6″	10′ 9″	15′ 11″	S12"X31.8#	5"	6′ 2″	10′ 2″	8″	13″	2260	1T2515S
		20′ 1″	11′ 2″	17′ 8″	12′ 7″	19′ 0″	S12"X31.8#	5"	7′ 7″	13′ 1″	8″	14″	2474	1T2518S
		18′ 4″	13′ 7″	20′ 8″	14′ 11″	22′ 0″	S12"X31.8#	5"	7′ 7″	13′ 1″	8″	15″	2697	1T2521S
	30′	25′ 5″	6′ 11″	11′ 6″	8′ 6″	13′ 2″	S15"X42.9#	5-1/2"	6′ 2″	10′ 2″	8″	19″	2758	1T3012S
		25′4″	9′ 2″	14′ 3″	10′ 9″	15′ 11″	S15"X42.9#	5-1/2"	6′ 2″	10′ 2″	8″	19″	2880	1T3015S
		25′ 3″	10′ 11″	17′ 5″	12′ 7″	19′ 0″	S15"X42.9#	5-1/2"	7′ 7″	13′ 1″	8″	17″	3094	1T3018S
		23′ 5″	13′ 4″	20′ 5″	14′ 11″	22′ 0″	S15"X42.9#	5-1/2"	7′ 7″	13′ 1″	8″	16″	3322	1T3021S
	35′	30′ 5″	6′ 11″	11′ 6″	8′ 6″	13′ 2″	S15"X42.9#*	5-1/2"	6′ 2″	10′ 2″	8″	19″	2730	1T3512S
		30′ 3″	9′ 2″	14′ 3″	10′ 9″	15′ 11″	S15"X42.9#*	5-1/2"	6′ 2″	10′ 2″	8″	16″	2826	1T3515S
		30′ 3″	10′ 11″	17′ 5″	12′ 7″	19′ 0″	S15"X42.9#*	5-1/2"	7′ 7″	13′ 1″	8″	17″	3037	1T3518S
		28′ 5″	13′ 4″	20′ 5″	14′ 11″	22′ 0″	S15"X42.9#*	5-1/2"	7′ 7″	13′ 1″	8″	16″	3130	1T3521S
	40′	35′ 5″	6′ 11″	11′ 6″	8′ 8″	13′ 3″	S15"X42.9#*	5-1/2"	6′ 2″	10′ 2″	8″	21″	3062	1T4012S
		35′ 3″	9′ 2″	14′ 4″	10′ 10″	16′ 0″	S15"X42.9#*	5-1/2"	6′ 2″	10′ 2″	8″	21″	3156	1T4015S
		35′ 2″	11′ 0″	17′ 5″	12′ 8″	19′ 2″	S15"X42.9#*	5-1/2"	7′ 7″	13′ 1″	8″	20″	3267	1T4018S
		33′ 5″	13′ 5″	20′ 5″	15′ 0″	22′ 1″	S15"X42.9#*	5-1/2"	7′ 7″	13′ 1″	8″	18″	3460	1T4021S

A CAPACITY	B SPAN	C CLEAR SPAN	D1 HEIGHT UNDER BEAM		D2 OVERALL HEIGHT		E1 BEAM SIZE	E2 FLANGE WIDTH	F CASTER FRAME SPREAD		G WHEEL DIA.	H MAX LEG CLEAR	NET WT (LBS.)	MODEL
			Min.	*Max.*	*Min.*	*Max.*			*Min.*	*Max.*				
2 TON	10′	5' 6"	6' 0"	9' 3"	7' 0"	10' 3"	S8"X18.4#	4"	4' 7"	7' 1"	8"	11"	981	2T109S
		5' 5"	7' 5"	12' 0"	8' 5"	13' 0"	S8"X18.4#	4"	6' 2"	10' 2"	8"	13"	1208	2T1012S
		5' 4"	9' 7"	14' 9"	10' 7"	15' 9"	S8"X18.4#	4"	6' 2"	10' 2"	8"	11"	1330	2T1015S
		5' 4"	11' 5"	17' 10"	12' 5"	18' 11"	S8"X18.4#	4"	7' 7"	13' 1"	8"	12"	1545	2T1018S
		5' 3"	13' 10"	20' 10"	14' 10"	21' 10"	S8"X18.4#	4"	7' 7"	13' 1"	8"	11"	1758	2T1021S
	15′	10' 2"	6' 0"	9' 3"	7' 2"	10' 5"	S10"X25.4#	4-5/8"	4' 7"	7' 1"	8"	13"	1229	2T159S
		10' 0"	7' 4"	11' 11"	8' 7"	13' 2"	S10"X25.4#	4-5/8"	6' 2"	10' 2"	8"	15"	1350	2T1512S
		9' 11"	9' 7"	14' 9"	10' 9"	15' 11"	S10"X25.4#	4-5/8"	6' 2"	10' 2"	8"	13"	1571	2T1515S
		9' 11"	11' 4"	17' 10"	12' 7"	19' 0"	S10"X25.4#	4-5/8"	7' 7"	13' 1"	8"	14"	1790	2T1518S
		9' 10"	13' 9"	20' 10"	14' 11"	22' 0"	S10"X25.4#	4-5/8"	7' 7"	13' 1"	8"	13"	2009	2T1521S
	20′	15' 6"	7' 2"	11' 9"	8' 7"	13' 2"	S12"X31.8#	5"	6' 2"	10' 2"	8"	15"	1703	2T2012S
		15' 4"	9' 5"	14' 6"	10' 9"	15' 11"	S12"X31.8#	5"	6' 2"	10' 2"	8"	13"	1823	2T2015S
		15' 4"	11' 2"	17' 8"	12' 7"	19' 0"	S12"X31.8#	5"	7' 7"	13' 1"	8"	14"	2038	2T2018S
		15' 3"	13' 7"	20' 8"	14' 11"	22' 0"	S12"X31.8#	5"	7' 7"	13' 1"	8"	13"	2260	2T2021S
	25′	20' 5"	6' 11"	11' 6"	8' 7"	13' 2"	S15"X42.9#	5-1/2"	6' 2"	10' 2"	8"	21"	2142	2T2512S
		20' 3"	9' 2"	14' 4"	10' 9"	15' 11"	S15"X42.9#	5-1/2"	6' 2"	10' 2"	8"	16"	2264	2T2515S
		20' 3"	10' 11"	17' 5"	12' 7"	19' 0"	S15"X42.9#	5-1/2"	7' 7"	13' 1"	8"	17"	2480	2T2518S
		20' 1"	13' 4"	20' 5"	14' 11"	22' 0"	S15"X42.9#	5-1/2"	7' 7"	13' 1"	8"	16"	2701	2T2521S
	30′	25' 7"	6' 9"	11' 4"	8' 8"	13' 3"	S18"X54.7#*	6"	6' 2"	10' 2"	8"	22"	2757	2T3012S
		25' 4"	8' 11"	14' 1"	10' 10"	16' 0"	S18"X54.7#*	6"	6' 2"	10' 2"	8"	19"	2878	2T3015S
		25' 3"	10' 9"	17' 2"	12' 8"	19' 2"	S18"X54.7#*	6"	7' 7"	13' 1"	8"	20"	3093	2T3018S
		23' 6"	13' 2"	20' 2"	15' 0"	22' 1"	S18"X54.7#*	6"	7' 7"	13' 1"	8"	18"	3320	2T3021S
	35′	29' 11"	6' 9"	11' 4"	8' 8"	13' 3"	S18"X54.7#*	6"	6' 2"	10' 2"	8"	22"	3368	2T3512S
		29' 8"	8' 11"	14' 1"	10' 10"	16' 0"	S18"X54.7#*	6"	6' 2"	10' 2"	8"	19"	3490	2T3515S
		29' 7"	10' 9"	17' 2"	12' 8"	19' 2"	S18"X54.7#*	6"	7' 7"	13' 1"	8"	20"	3705	2T3518S
		28' 7"	13' 2"	20' 2"	15' 0"	22' 1"	S18"X54.7#*	6"	7' 7"	13' 1"	8"	18"	3907	2T3521S
	40′	35' 7"	6' 9"	11' 4"	8' 8"	13' 3"	S18"X54.7#*	6"	6' 2"	10' 2"	8"	23"	3716	2T4012S
		35' 4"	8' 11"	14' 1"	10' 10"	16' 0"	S18"X54.7#*	6"	6' 2"	10' 2"	8"	20"	3837	2T4015S
		35' 3"	10' 9"	17' 2"	12' 8"	19' 2"	S18"X54.7#*	6"	7' 7"	13' 1"	8"	21"	4052	2T4018S
		33' 6"	13' 2"	20' 2"	15' 0"	22' 1"	S18"X54.7#*	6"	7' 7"	13' 1"	8"	19"	4256	2T4021S

A CAPACITY	B SPAN	C CLEAR SPAN	D1 HEIGHT UNDER BEAM		D2 OVERALL HEIGHT		E1 BEAM SIZE	E2 FLANGE WIDTH	F CASTER FRAME SPREAD		G WHEEL DIA.	H MAX LEG CLEAR	NET WT (LBS.)	MODEL
			Min.	Max.	Min.	Max.			Min.	Max.				
3 TON	10′	5' 0"	6' 1"	9' 4"	7' 3"	10' 7"	S10"X25.4#	4-5/8"	4' 7"	7' 1"	8"	13"	1450	3T109S
		5' 0"	7' 5"	12' 0"	8' 8"	13' 3"	S10"X25.4#	4-5/8"	6' 2"	10' 2"	8"	15"	1650	3T1012S
		4' 10"	9' 7"	14' 9"	10' 10"	16' 0"	S10"X25.4#	4-5/8"	6' 2"	10' 2"	8"	13"	1825	3T1015S
		3' 2"	11' 5"	17' 10"	12' 8"	19' 2"	S10"X25.4#	4-5/8"	7' 7"	13' 1"	8"	14"	2100	3T1018S
		3' 1"	14' 3"	22' 4"	15' 7"	23' 7"	S10"X25.4#	4-5/8"	9' 7"	15' 1"	8"	14"	2515	3T1023S
	15′	10' 0"	6' 1"	9' 4"	7' 3"	10' 7"	S10"X25.4#	4-5/8"	4' 7"	7' 1"	8"	14"	1570	3T159S
		9' 11"	7' 5"	12' 0"	8' 8"	13' 3"	S10"X25.4#	4-5/8"	6' 2"	10' 2"	8"	16"	1765	3T1512S
		9' 10"	9' 7"	14' 9"	10' 10"	16' 0"	S10"X25.4#	4-5/8"	6' 2"	10' 2"	8"	14"	1930	3T1515S
		8' 2"	11' 5"	17' 10"	12' 8"	19' 2"	S10"X25.4#	4-5/8"	7' 7"	13' 1"	8"	15"	2200	3T1518S
		8' 1"	14' 3"	22' 4"	15' 7"	23' 7"	S10"X25.4#	4-5/8"	9' 7"	15' 1"	8"	15"	2650	3T1523S
	20′	15' 2"	7' 0"	11' 7"	8' 8"	13' 3"	S15"X42.9#	5-1/2"	6' 2"	10' 2"	8"	18"	2240	3T2012S
		15' 0"	9' 2"	14' 4"	10' 10"	16' 0"	S15"X42.9#	5-1/2"	6' 2"	10' 2"	8"	15"	2415	3T2015S
		13' 5"	11' 0"	17 5"	12' 8"	19' 2"	S15"X42.9#	5-1/2"	7' 7"	13' 1"	8"	16"	2684	3T2018S
		13' 3"	13' 10"	21' 11"	15' 6"	23' 7"	S15"X42.9#	5-1/2"	9' 7"	15' 1"	8"	16"	3126	3T2023S
	25′	20' 4"	6' 9"	11' 4"	8' 9"	13' 4"	S18"X54.7#	6"	6' 2"	10' 2"	8"	23"	2800	3T2512S
		20' 1"	9' 0"	14' 2"	10' 11"	16' 1"	S18"X54.7#	6"	6' 2"	10' 2"	8"	20"	2958	3T2515S
		18' 6"	10' 10"	17' 3"	12' 9"	19' 3"	S18"X54.7#	6"	7' 7"	13' 1"	8"	21"	3228	3T2518S
		18' 4"	13' 8"	21' 9"	15' 7"	23' 8"	S18"X54.7#	6"	9' 7"	15' 1"	8"	21"	3670	3T2523S
	30′	25' 4"	6' 9"	11' 4"	8' 9"	13' 4"	S18"X54.7#*	6"	6' 2"	10' 2"	8"	24"	3321	3T3012S
		25' 1"	9' 0"	14' 2"	10' 11"	16' 1"	S18"X54.7#*	6"	6' 2"	10' 2"	8"	21"	3490	3T3015S
		23' 6"	10' 10"	17' 3"	12' 9"	19' 3"	S18"X54.7#*	6"	7' 7"	13' 1"	8"	22"	3727	3T3018S
		23' 4"	13' 8"	21' 9"	15' 7"	23' 8"	S18"X54.7#*	6"	9' 7"	15' 1"	8"	22"	4170	3T3023S
	35′	30' 4"	6' 9"	11' 4"	8' 9"	13' 4"	S18"X54.7#*	6"	6' 2"	10' 2"	8"	24"	3675	3T3512S
		30' 1"	9' 0"	14' 2"	10' 11"	16' 1"	S18"X54.7#*	6"	6' 2"	10' 2"	8"	21"	3840	3T3515S
		28' 6"	10' 10"	17' 3"	12' 9"	19' 3"	S18"X54.7#*	6"	7' 7"	13' 1"	8"	22"	4086	3T3518S
		28' 4"	13' 8"	21 9"	15' 7"	23' 8"	S18"X54.7#*	6"	9' 7"	15' 1"	8"	22"	4529	3T3523S
	40′	35' 4"	6' 9"	11' 4"	8' 9"	13' 4"	S18"X54.7#*	6"	6' 2"	10' 2"	8"	24"	4167	3T4012S
		35' 1"	9' 0"	14' 2"	10' 11"	16' 1"	S18"X54.7#*	6"	6' 2"	10' 2"	8"	21"	4350	3T4015S
		33' 6"	10' 10"	17' 3"	12' 9"	19' 3"	S18"X54.7#*	6"	7' 7"	13' 1"	8"	22"	4567	3T4018S
		33' 4"	13' 8"	21' 9"	15' 7"	23' 8"	S18"X54.7#*	6"	9' 7"	15' 1"	8"	22"	5001	3T4023S

A CAPACITY	B SPAN	C CLEAR SPAN	D1 HEIGHT UNDER BEAM		D2 OVERALL HEIGHT		E1 BEAM SIZE	E2 FLANGE WIDTH	F CASTER FRAME SPREAD		G WHEEL DIA.	H MAX LEG CLEAR	NET WT (LBS.)	MODEL
			Min.	Max.	Min.	Max.			Min.	Max.				
5 TON	10'	5' 0"	6' 1"	9' 4"	7' 4"	10' 7"	S10"X25.4#	4-5/8"	4' 7"	7' 1"	8"	14"	1491	5T109S
		4' 9"	9' 8"	14' 10"	10' 11"	16' 1"	S10"X25.4#	4-5/8"	6' 2"	10' 2"	8"	14"	2051	5T1015S
		3' 2"	11' 6"	17' 11"	12' 9"	19' 3"	S10"X25.4#	4-5/8"	7' 7"	13' 1"	8"	15"	2386	5T1018S
		3' 1"	14' 4"	22' 5"	15' 7"	23' 8"	S10"X25.4#	4-5/8"	9' 7"	15' 1"	8"	15"	2933	5T1023S
	15′	9' 10"	5' 8"	8' 11"	7' 4"	10' 7"	S15"X42.9#	5-1/2"	4' 7"	7' 1"	8"	15"	1891	5T159S
		9' 11"	9' 3"	14' 5"	10' 11"	16' 1"	S15"X42.9#	5-1/2"	6' 2"	10' 2"	8"	15"	2451	5T1515S
		8' 4"	11' 1"	17' 6"	12' 9"	19' 3"	S15"X42.9#	5-1/2"	7' 7"	13' 1"	8"	16"	2785	5T1518S
		8' 3"	13' 11"	22' 0"	15' 7"	23' 8"	S15"X42.9#	5-1/2"	9' 7"	15' 1"	8"	16"	3328	5T1523S
	20′	15' 6"	5' 5"	8' 8"	7' 4"	10' 7"	S18"X54.7#	6"	4' 7"	7' 1"	8"	17"	2360	5T209S
		15' 1"	9' 0"	14' 2"	10' 11"	16' 1"	S18"X54.7#	6"	6' 2"	10' 2"	8"	17"	2920	5T2015S
		13' 6"	10' 10"	17' 3"	12' 9"	19' 3"	S18"X54.7#	6"	7' 7"	13' 1"	8"	18"	3255	5T2018S
		13' 4"	13' 8"	21' 9"	15' 7"	23' 8"	S18"X54.7#	6"	9' 7"	15' 1"	8"	18"	3797	5T2023S
	25′	20' 0"	9' 1"	14' 2"	11' 1"	16' 2"	S18"X54.7#*	6"	6' 2"	10' 2"	8"	20"	3044	5T2515S
		18' 6"	10' 10"	17' 4"	12' 9"	19' 3"	S18"X54.7#*	6"	7' 7"	13' 1"	8"	21"	3755	5T2518S
		18' 4"	13' 9"	21' 9"	15' 8"	23' 9"	S18"X54.7#*	6"	9' 7"	15' 1"	8"	21"	4297	5T2523S
	30′	25' 0"	9' 1"	14' 2"	11' 1"	16' 2"	S18"X54.7#*	6"	6' 2"	10' 2"	8"	21"	3326	5T3015S
		23' 6"	10' 10"	17' 4"	12' 9"	19' 3"	S18"X54.7#*	6"	7' 7"	13' 1"	8"	22"	4094	5T3018S
		23' 4"	13' 9"	21' 9"	15' 8"	23' 9"	S18"X54.7#*	6"	9' 7"	15' 1"	8"	22"	4637	5T3023S
	35′	30' 0"	9' 1"	14' 2"	11' 1"	16' 2"	S18"X54.7#*	6"	6' 2"	10' 2"	8"	21"	4019	5T3515S
		28' 6"	10' 10"	17' 4"	12' 9"	19' 3"	S18"X54.7#*	6"	7' 7"	13' 1"	8"	22"	4560	5T3518S
		28' 4"	13' 9"	21' 9"	15' 8"	23' 9"	S18"X54.7#*	6"	9' 7"	15' 1"	8"	22"	5102	5T3523S
	40′	35' 3"	8' 6"	13' 8"	11' 1"	16' 2"	S24"X80#*	7"	6' 2"	10' 2"	8"	23"	5400	5T4015S
		33' 9"	10' 4"	16' 9"	12' 9"	19' 3"	S24"X80#*	7"	7' 7"	13' 1"	8"	25"	5850	5T4018S
		33' 7"	13' 2"	21' 3"	15' 8"	23' 9"	S24"X80#*	7"	9' 7"	15' 1"	8"	24"	6450	5T4023S

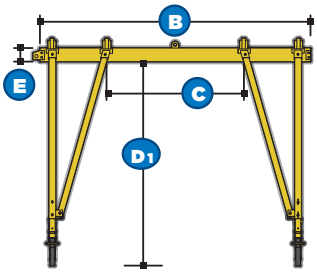

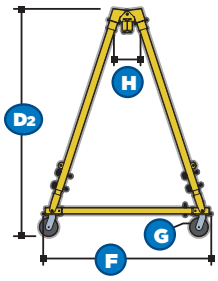

SPANCO GANTRY CRANES

T SERIES
All-Steel Construction
(continued)

A CAPACITY	B SPAN	C CLEAR SPAN	D1 HEIGHT UNDER BEAM		D2 OVERALL HEIGHT		E1 BEAM SIZE	E2 FLANGE WIDTH	F CASTER FRAME SPREAD		G WHEEL DIA.	H MAX LEG CLEAR	NET WT (LBS.)	MODEL
			Min.	*Max.*	*Min.*	*Max.*			*Min.*	*Max.*				
8 TON	15′	9' 8"	9' 7"	14' 9"	11' 6"	16' 8"	S18"X54.7#	6"	6' 3"	10' 4"	12"	18"	4265	8T1515S
		8' 4"	11' 5"	17' 10"	13' 4"	19' 10"	S18"X54.7#	6"	7' 8"	13' 3"	12"	19"	4790	8T1518S
		8' 2"	14' 3"	22' 3"	16' 2"	24' 3"	S18"X54.7#	6"	9' 8"	15' 3"	12"	18"	5775	8T1523S
	20′	14' 11"	9' 7"	14' 9"	11' 6"	16' 8"	S18"X54.7#*	6"	6' 3"	10' 4"	12"	20"	4355	8T2015S
		12' 10"	11' 5"	17' 10"	13' 4"	19' 10"	S18"X54.7#*	6"	7' 8"	13' 3"	12"	21"	4785	8T2018S
		12' 8"	14' 3"	22' 3"	16' 2"	24' 3"	S18"X54.7#*	6"	9' 8"	15' 3"	12"	21"	5842	8T2023S
	25′	19' 11"	9' 7"	14' 9"	11' 6"	16' 8"	S18"X54.7#*	6"	6' 3"	10' 4"	12"	21"	4550	8T2515S
		18' 4"	11' 5"	17' 10"	13' 4"	19' 10"	S18"X54.7#*	6"	7' 8"	13' 3"	12"	22"	5204	8T2518S
		18' 2"	14' 3"	22' 3"	16' 2"	24' 3"	S18"X54.7#*	6"	9' 8"	15' 3"	12"	22"	6190	8T2523S
	30′	25' 1"	9' 1"	14' 3"	11' 6"	16' 8"	S24"X80#*	7"	6' 3"	10' 4"	12"	21"	5831	8T3015S
		23' 7"	10' 10"	17' 4"	13' 4"	19' 10"	S24"X80#*	7"	7' 8"	13' 3"	12"	22"	6350	8T3018S
		23' 5"	13' 8"	21' 9"	16' 2"	24' 3"	S24"X80#*	7"	9' 8"	15' 3"	12"	22"	7322	8T3023S
	35′	30' 1"	9' 1"	14' 3"	11' 6"	16' 8"	S24"X80#*	7"	6' 3"	10' 4"	12"	23"	6592	8T3515S
		28' 7"	10' 10"	17' 4"	13' 4"	19' 10"	S24"X80#*	7"	7' 8"	13' 3"	12"	25"	7136	8T3518S
		28' 5"	13' 8"	21' 9"	16' 2"	24' 3"	S24"X80#*	7"	9' 8"	15' 3"	12"	24"	8121	8T3523S
	40′	35' 1"	9' 1"	14' 3"	11' 6"	16' 8"	S24"X80#*	7"	6' 3"	10' 4"	12"	23"	6959	8T4015S
		33' 7"	10' 10"	17' 4"	13' 4"	19' 10"	S24"X80#*	7"	7' 8"	13' 3"	12"	25"	7453	8T4018S
		33' 5"	13' 8"	21' 9"	16' 2"	24' 3"	S24"X80#*	7"	9' 8"	15' 3"	12"	24"	8450	8T4023S

A CAPACITY	B SPAN	C CLEAR SPAN	D1 HEIGHT UNDER BEAM		D2 OVERALL HEIGHT		E1 BEAM SIZE	E2 FLANGE WIDTH	F CASTER FRAME SPREAD		G WHEEL DIA.	H MAX LEG CLEAR	NET WT (LBS.)	MODEL
			Min.	*Max.*	*Min.*	*Max.*			*Min.*	*Max.*				
10 TON	15′	9' 11"	9' 7"	14' 9"	11' 6"	16' 8"	S18"X54.7#	6"	6' 3"	10' 4"	12"	20"	4350	10T1515S
		8' 4"	11' 5"	17' 10"	13' 4"	19' 10"	S18"X54.7#	6"	7' 8"	13' 3"	12"	21"	4831	10T1518S
		8' 2"	14' 3"	22' 3"	16' 2"	24' 3"	S18"X54.7#	6"	9' 8"	15' 3"	12"	21"	5816	10T1523S
	20′	15' 1"	9' 1"	14' 3"	11' 6"	16' 8"	S24"X80#	7"	6' 3"	10 4"	12"	21"	5118	10T2015S
		13' 7"	10' 10"	17' 4"	13' 4"	19' 10"	S24"X80#	7"	7' 8"	13' 3"	12"	22"	5645	10T2018S
		13' 5"	13' 8"	21' 9"	16' 2"	24' 3"	S24"X80#	7"	9' 8"	15' 3"	12"	22"	6630	10T2023S
	25′	20' 1"	9' 1"	14' 3"	11' 6"	16' 8"	S24"X80#*	7"	6' 3"	10' 4"	12"	23"	5694	10T2515S
		18' 7"	10' 10"	17' 4"	13' 4"	19' 10"	S24"X80#*	7"	7' 8"	13' 3"	12"	25"	6193	10T2518S
		18' 5"	13' 8"	21' 9"	16' 2"	24' 3"	S24"X80#*	7"	9' 8"	15' 3"	12"	24"	7175	10T2523S
	30′	25' 1"	9' 1"	14' 3"	11' 6"	16' 8"	S24"X80#*	7"	6' 3"	10' 4"	12"	23"	5878	10T3015S
		23' 7"	10' 10"	17' 4"	13' 4"	19' 10"	S24"X80#*	7"	7' 8"	13' 3"	12"	25"	6480	10T3018S
		23' 5"	13' 8"	21' 9"	16' 2"	24' 3"	S24"X80#*	7"	9' 8"	15' 3"	12"	24"	7365	10T3023S
	35′	30' 1"	9' 1"	14' 3"	11' 6"	16' 8"	S24"X80#*	7"	6' 3"	10' 4"	12"	23"	6650	10T3515S
		28' 7"	10' 10"	17' 4"	13' 4"	19' 10"	S24"X80#*	7"	7' 8"	13' 3"	12"	25"	7136	10T3518S
		28' 5"	13' 8"	21' 9"	16' 2"	24' 3"	S24"X80#*	7"	9' 8"	15' 3"	12"	24"	8121	10T3523S
	40′	35' 1"	9' 1"	14' 3"	11' 6"	16' 8"	S24"X80#*	7"	6' 3"	10' 4"	12"	23"	7603	10T4015S
		33' 7"	10' 10"	17' 4"	13' 4"	19' 10"	S24"X80#*	7"	7' 8"	13' 3"	12"	25"	8062	10T4018S
		33' 5"	13' 8"	21' 9"	16' 2"	24' 3"	S24"X80#*	7"	9' 8"	15' 3"	12"	24"	9037	10T4023S

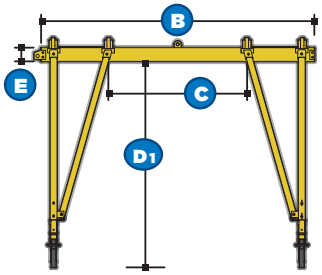

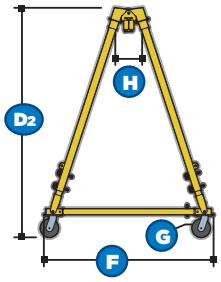

T SERIES
Handy Cart Kits

DESCRIPTION	NET WT. (LBS.)	KIT NUMBER
1-2 Ton Models	46	TCK 1-2
3-5 Ton Models	55	TCK 3-5
8-10 Ton Models	94	TCK 8-10

T SERIES
Steel with Aluminum I-Beam

A CAPACITY	B SPAN	C CLEAR SPAN	D1 HEIGHT UNDER BEAM		D2 OVERALL HEIGHT		E1 BEAM SIZE	E2 FLANGE WIDTH	F CASTER FRAME SPREAD		G WHEEL DIA.	H MAX LEG CLEAR	NET WT (LBS.)	MODEL
			Min.	*Max.*	*Min.*	*Max.*			*Min.*	*Max.*				
1 TON	10′	5' 2"	6' 2"	9' 6"	7' 0"	10' 4"	ALU6X4.3#	3-3/8"	4' 7"	7' 1"	8"	10"	808	1T109SA
		5' 2"	7' 4"	11' 11"	8' 5"	13' 0"	ALU8X6.35#	4"	6' 2"	10' 2"	8"	13"	935	1T1012SA
		5' 1"	9' 7"	14' 9"	10' 7"	15' 9"	ALU8X6.35#	4"	6' 2"	10' 2"	8"	11"	1028	1T1015SA
		5' 0"	11' 5"	17' 10"	12' 5"	18' 11"	ALU8X6.35#	4"	7' 7"	13' 1"	8"	12"	1239	1T1018SA
		5' 0"	14' 0"	21' 10"	14' 10"	21' 10"	ALU8X6.35#	4"	7' 7"	13' 1"	8"	11"	1343	1T1021SA
	15′	10' 4"	5' 10"	9' 1"	7' 0"	10' 4"	ALU10X8.76#	4-5/8"	4' 7"	7' 1"	8"	13"	865	1T159SA
		10' 3"	7' 3"	11' 9"	8' 5"	13' 0"	ALU10X8.76#	4-5/8"	6' 2"	10' 2"	8"	15"	965	1T1512SA
		10' 2"	9' 5"	14' 7"	10' 7"	15' 9"	ALU10X8.76#	4-5/8"	6' 2"	10' 2"	8"	13"	1059	1T1515SA
		10' 1"	11' 3"	17' 9"	12' 5"	18' 11"	ALU10X8.76#	4-5/8"	7' 7"	13' 1"	8"	14"	1272	1T1518SA
		10' 1"	13' 6"	20' 6"	14' 10"	21' 10"	ALU12X10.90#	5"	7' 7"	13' 1"	8"	14"	1375	1T1521SA

A CAPACITY	B SPAN	C CLEAR SPAN	D1 HEIGHT UNDER BEAM		D2 OVERALL HEIGHT		E1 BEAM SIZE	E2 FLANGE WIDTH	F CASTER FRAME SPREAD		G WHEEL DIA.	H MAX LEG CLEAR	NET WT (LBS.)	MODEL
			Min.	*Max.*	*Min.*	*Max.*			*Min.*	*Max.*				
2 TON	10′	5' 7"	5' 10"	9' 1"	6' 8"	9' 11"	ALU10X8.76#	4-5/8"	4' 7"	7' 1"	8"	13"	885	2T109SA
		5' 6"	7' 3"	11' 10"	8' 1"	12' 8"	ALU10X8.76#	4-5/8"	6' 2"	10' 2"	8"	14"	1112	2T1012SA
		5' 5"	9' 5"	14' 7"	10' 3"	15' 5"	ALU10X8.76#	4-5/8"	6' 2"	10' 2"	8"	12"	1234	2T1015SA
		5' 4"	11' 3"	17' 8"	12' 1"	18' 6"	ALU10X8.76#	4-5/8"	7' 7"	13' 1"	8"	13"	1449	2T1018SA
		5' 3"	13' 8"	20' 8"	14' 6"	21' 6"	ALU10X8.76#	4-5/8"	7' 7"	13' 1"	8"	13"	1662	2T1021SA
	15′	10' 3"	5' 10"	9' 1"	7' 2"	10' 5"	ALU12X10.90#	5"	4' 7"	7' 1"	8"	14"	1008	2T159SA
		10' 2"	7' 2"	11' 9"	8' 7"	13' 2"	ALU12X10.90#	5"	6' 2"	10' 2"	8"	17"	1133	2T1512SA
		10' 0"	9' 5"	14' 7"	10' 9"	15 11"	ALU12X10.90#	5"	6' 2"	10' 2"	8"	14"	1244	2T1515SA
		10' 0"	11' 2"	17' 8"	12' 7"	19' 0"	ALU12X10.90#	5"	7' 7"	13' 1"	8"	15"	1354	2T1518SA
		9' 11"	13' 7"	20' 8"	14' 11"	22' 0"	ALU12X10.90#	5"	7' 7"	13' 1"	8"	14"	1792	2T1521SA

A CAPACITY	B SPAN	C CLEAR SPAN	D1 HEIGHT UNDER BEAM		D2 OVERALL HEIGHT		E1 BEAM SIZE	E2 FLANGE WIDTH	F CASTER FRAME SPREAD		G WHEEL DIA.	H MAX LEG CLEAR	NET WT (LBS.)	MODEL
			Min.	*Max.*	*Min.*	*Max.*			*Min.*	*Max.*				
3 TON	10′	5' 0"	6' 0"	9' 4"	7' 3"	10' 7"	ALU10X8.76#	4-5/8"	4' 7"	7' 1"	8"	14"	1284	3T109SA
		4' 11"	7' 5"	12' 0"	8' 8"	13' 3"	ALU10X8.76#	4-5/8"	6' 2"	10' 2"	8"	16"	1484	3T1012SA
		4' 11"	9' 5"	14' 7"	10' 10"	16' 0"	ALU12X10.99#	5"	6' 2"	10' 2"	8"	15"	1617	3T1015SA
		3' 3"	11' 3"	17' 8"	12' 8"	19' 2"	ALU12X10.99#	5"	7' 7"	13' 1"	8"	16"	1842	3T1018SA
	15′	10' 1"	5' 11"	9' 2"	7' 3"	10' 7"	ALU12X10.90#	5"	4' 7"	7' 1"	8"	15"	1418	3T159SA
		10' 0"	7' 3"	11' 10"	8' 8"	13' 3"	ALU12X10.90#	5"	6' 2"	10' 2"	8"	18"	1615	3T1512SA
		9' 11"	9' 5"	14' 7"	10' 10"	16' 0"	ALU12X10.90#	5"	6' 2"	10' 2"	8"	15"	1778	3T1515SA
		8' 3"	11' 3"	17' 8"	12' 8"	19' 2"	ALU12X10.90#	5"	7' 7"	13' 1"	8"	16"	2050	3T1518SA

T SERIES
Detachable Height Kits

DESCRIPTION	NET WT. (LBS.)	KIT NUMBER
For Gantry Capacity 1-5 Tons	94	THA 1-5
For Gantry Capacity 8-10 Tons	97	THA 8-10

GANTRY CRANES
A SERIES

STURDY, WITH ADJUSTABLE HEIGHTS

Spanco® A Series All-Steel Gantry Cranes are portable, lightweight, low-cost lifting solutions with sturdy "A" frame designs.

Spanco A Series Gantry Cranes also have greater clear spans because they don't require four brace legs. You can independently adjust the length of the gantry legs to meet ever-changing lift requirements. Aluminum construction with adjustable span is also available.

Crane Height Adjustments: Adjust in 6-inch increments using spring-loaded steel locking pins that automatically engage when height positioning holes are reached. Adjust heights for specific lifting tasks, uneven floors, or to move your gantry through doorways.

Adjustable Spans: Standard on aluminum cranes, optional on steel cranes. Allows gantry to be shortened for transport down narrow aisles.

Heavy-Duty Casters: Four-position, swivel-lock casters with moldon polyurethane wheels for excellent floor protection.

Aluminum Gantry Cranes: Weigh as little as 120 pounds, making them ideal for fast crane relocation. See page 12 for more information about our Spanco Aluminum Gantry Cranes.

Spanco 5-ton A Series Gantry Crane lifting engines from military vehicles for maintenance.

SPANCO A SERIES GANTRY CRANES

A Series	Capacities	Heights Under I-Beam	Span Lengths*
Steel with Adjustable Span	Up to 10 tons	Up to 16′	Up to 40′
Steel with Fixed Span			
Aluminum with Adjustable Span	Up to 3 tons	Up to 12′	Up to 15′

**Longer custom spans available*

OPTIONS FOR A SERIES GANTRY CRANES

- **Adjustable-Span Kits:** Convert your steel fixed-span gantry to an adjustable-span gantry. DIY installation requires no drilling of the I-beam.
- **Height Adjustment Winch-Hoist Kits:** Includes two LUG-ALL™ cable winch-hoists to quickly and easily change I-beam height. Note: Only for use with Spanco A Series. Use under no-load conditions.

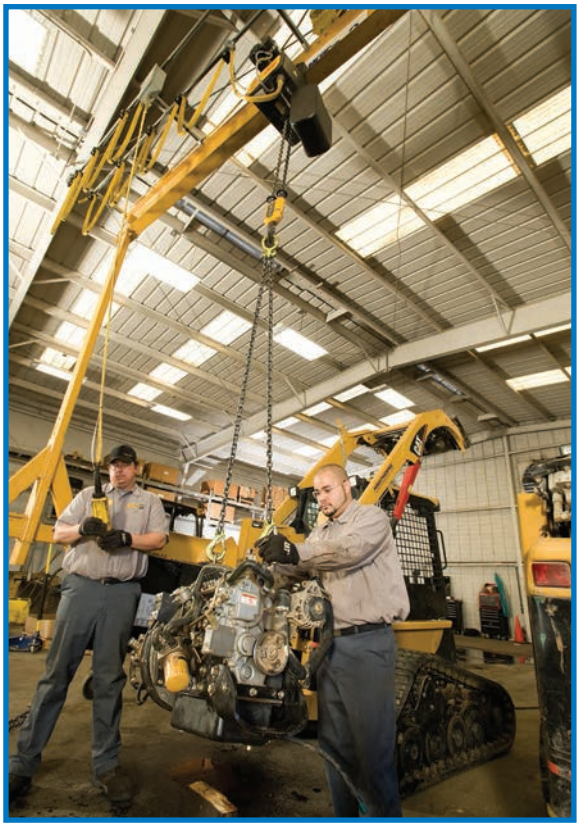

A Series Gantry Crane lifting an engine from a small loader.

Caster Options:

- Wheel brakes on polyurethane casters
- Steel V-groove casters with rigid body for use on V-groove tracks

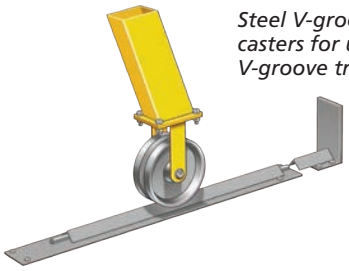

Steel V-groove casters for use with V-groove track

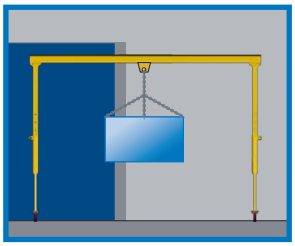

Adjust the height of a Spanco A Series Gantry Crane to move through doorways

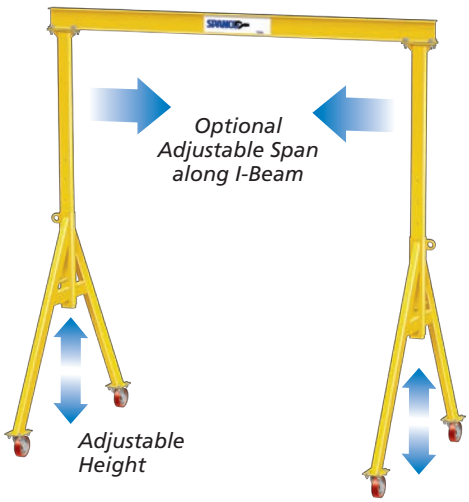

Height adjustment via spring-loaded steel locking pin

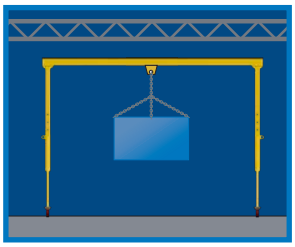

Adjust the height of a Spanco A Series Gantry Crane to move under mezzanines

Optional height adjustment with LUG-ALL™ winches

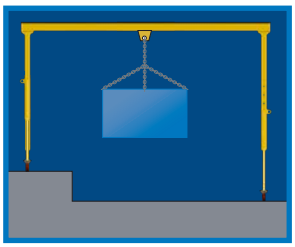

Independent height adjustment allows movement along floors with different elevations

SPANCO

GANTRY CRANES

A Series

Steel, Adjustable Height

A CAPACITY	B1 SPAN	B2 SPAN BETWEEN WHEEL CENTERS	C CLEAR SPAN	D1 HEIGHT UNDER BEAM		D2 OVERALL HEIGHT		E1 BEAM SIZE	E2 FLANGE WIDTH	F TREAD	G CASTER DIA.	NET WT. (LBS.)	MODEL
				Min.	Max.	Min.	Max.						
1 TON	8'	7' 3"	6' 11"	7' 2"	10' 2"	7' 8"	10' 8"	S6"X12.5#	3-3/8"	5' 5"	6"	404	1A0810
		7' 3"	6' 11"	9' 8"	12' 8"	10' 2"	13' 2"	S6"X12.5#	3-3/8"	5' 5"	6"	428	1A0812
		7' 3"	6' 10"	12' 0"	15' 6"	12' 6"	16' 0"	S6"X12.5#	3-3/8"	6' 6"	8"	694	1A0815
	10'	9' 3"	8' 11"	7' 2"	10' 2"	7' 8"	10' 8"	S6"X12.5#	3-3/8"	5' 5"	6"	429	1A1010
		9' 3"	8' 11"	9' 8"	12' 8"	10' 2"	13' 2"	S6"X12.5#	3-3/8"	5' 5"	6"	453	1A1012
		9' 3"	8' 10"	12' 0"	15' 6"	12' 6"	16' 0"	S6"X12.5#	3-3/8"	6' 6"	8"	719	1A1015
	12'	11' 3"	10' 11"	7' 2"	10' 2"	7' 8"	10' 8"	S6"X12.5#	3-3/8"	5' 5"	6"	454	1A1210
		11' 3"	10' 11"	9' 8"	12' 8"	10' 2"	13' 2"	S6"X12.5#	3-3/8"	5' 5"	6"	478	1A1212
		11' 3"	10' 10"	12' 0"	15' 6"	12' 6"	16' 0"	S6"X12.5#	3-3/8"	6' 6"	8"	744	1A1215
	15'	14' 3"	13' 11"	7' 2"	10' 2"	7' 10"	10' 0"	S8"X18.4#	4"	5' 5"	6"	533	1A1510
		14' 3"	13' 11"	9' 8"	12' 8"	10' 4"	13' 4"	S8"X18.4#	4"	5' 5"	6"	557	1A1512
		14' 3"	13' 10"	12' 0"	15' 6"	12' 8"	16' 2"	S8"X18.4#	4"	6' 6"	8"	823	1A1515
	20'	19' 3"	18' 11"	7' 2"	10' 2"	8' 1"	11' 1"	W10"X30#	5-3/4"	5' 5"	6"	904	1A2010-W
		19' 3"	18' 11"	9' 8"	12' 8"	10' 7"	13' 7"	W10"X30#	5-3/4"	5' 5"	6"	928	1A2012-W
		19' 3"	18' 10"	12' 0"	15' 6"	12' 11"	16' 5"	W10"X30#	5-3/4"	6' 6"	8"	1194	1A2015-W
	25'	24' 3"	23' 11"	7' 2"	10' 2"	8' 1"	11' 1"	W10"X30#	5-3/4"	5' 5"	6"	1054	1A2510-W
		24' 3"	23' 11"	9' 8"	12' 8"	10' 7"	13' 7"	W10"X30#	5-3/4"	5' 5"	6"	1204	1A2512-W
		24' 3"	23' 10"	12' 0"	15' 6"	12' 11"	16' 5"	W10"X30#	5-3/4"	6' 6"	8"	1344	1A2515-W
	30'	29' 1"	28' 10"	9' 0"	12' 6"	9' 11"	13' -5"	W10"X30#	5-3/4"	6' 6"	8"	1435	1A3012-W
		29' 1"	28' 10"	12' 0"	15' 6"	12' 11"	16' 5"	W10"X30#	5-3/4"	6' 6"	8"	1495	1A3015-W
	35'	34' 1"	33' 8"	9' 0"	12' 6"	10' 5"	13' 11"	W16"X50#	7-1/8"	6' 6"	8"	2285	1A3512-W
		34' 1"	33' 8"	12' 0"	15' 6"	13' 5"	16' 11"	W16"X50#	7-1/8"	6' 6"	8"	2344	1A3515-W
	40'	39' 1"	38' 8"	9' 0"	12' 6"	10' 5"	14' 0"	W16"X50#	7-1/8"	6' 6"	8"	2535	1A4012-W
		39' 1"	38' 8"	12' 0"	15' 6"	13' 5"	17' 0"	W16"X50#	7-1/8"	6' 6"	8"	2594	1A4015-W

A CAPACITY	B1 SPAN	B2 SPAN BETWEEN WHEEL CENTERS	C CLEAR SPAN	D1 HEIGHT UNDER BEAM		D2 OVERALL HEIGHT		E1 BEAM SIZE	E2 FLANGE WIDTH	F TREAD	G CASTER DIA.	NET WT. (LBS.)	MODEL
				Min.	Max.	Min.	Max.						
2 TON	10'	9' 3"	8' 10"	9' 0"	12' 6"	9' 8"	13' 2"	S8"X18.4#	4"	6' 6"	8"	719	2A1012
		9' 3"	8' 10"	12' 0"	15' 6"	12' 8"	16' 2"	S8"X18.4#	4"	6' 6"	8"	778	2A1015
	15'	14' 3"	13' 10"	9' 0"	12' 6"	9' 10"	13' 4"	S10"X25.4#	4-5/8"	6' 6"	8"	916	2A1512
		14' 3"	13' 10"	12' 0"	15' 6"	12' 10"	16' 4"	S10"X25.4#	4-5/8"	6' 6"	8"	975	2A1515
	20'	19' 3"	18' 10"	9' 0"	12' 6"	10' 1"	13' 7"	W12"X35#	6-1/2"	6' 6"	8"	1235	2A2012-W
		19' 3"	18' 10"	12' 0"	15' 6"	13' 1"	16' 7"	W12"X35#	6-1/2"	6' 6"	8"	1294	2A2015-W
	25'	24' 3"	23' 10"	9' 0"	12' 6"	10' 1"	13' 7"	W12"X35#	6-1/2"	6' 6"	8"	1410	2A2512-W
		24' 3"	23' 10"	12' 0"	15' 6"	13' 1"	16' 7"	W12"X35#	6-1/2"	6' 6"	8"	1469	2A2515-W
	30'	29' 1"	28' 8"	9' 0"	12' 6"	10' 5"	13' 11"	W16"X50#	7-1/8"	6' 6"	8"	2035	2A3012-W
		29' 1"	28' 8"	12' 0"	15' 6"	13' 5"	16' 11"	W16"X50#	7-1/8"	6' 6"	8"	2095	2A3015-W
	35'	34' 1"	33' 7"	9' 0"	12' 6"	10' 7"	14' 1"	W18"X55#	7-1/2"	6' 6"	8"	2460	2A3512-W
		34' 1"	33' 7"	12' 0"	15' 6"	13' 7"	17' 1"	W18"X55#	7-1/2"	6' 6"	8"	2519	2A3515-W
	40'	39' 1"	38' 7"	9' 0"	12' 6"	10' 5"	13' 11"	W16"X50#*	7-1/8"	6' 6"	8"	3470	2A4012-W
		39' 1"	38' 7"	12' 0"	15' 6"	13' 5"	16' 11"	W16"X50#*	7-1/8"	6' 6"	8"	3529	2A4015-W

A CAPACITY	B1 SPAN	B2 SPAN BETWEEN WHEEL CENTERS	C CLEAR SPAN	D1 HEIGHT UNDER BEAM		D2 OVERALL HEIGHT		E1 BEAM SIZE	E2 FLANGE WIDTH	F TREAD	G CASTER DIA.	NET WT. (LBS.)	MODEL
				Min.	Max.	Min.	Max.						
3 TON	10'	9' 1"	8' 6"	9' 4"	12' 10"	10' 2"	13' 8"	S10"X25.4#	4-5/8"	6' 6"	8"	793	3A1012
		9' 1"	8' 6"	12' 4"	15' 10"	13' 2"	16' 8"	S10"X25.4#	4-5/8"	6' 6"	8"	857	3A1015
	15'	14' 1"	13' 6"	9' 4"	12' 10"	10' 2"	13' 8"	S10"X25.4#	4-5/8"	6' 6"	8"	990	3A1512
		14' 1"	13' 6"	12' 4"	15' 10"	13' 2"	16' 8"	S10"X25.4#	4-5/8"	6' 6"	8"	1054	3A1515
	20'	19' 1"	18' 6"	9' 4"	12' 10"	10' 9"	14' 3"	W16"X50#	7-1/8"	6' 6"	8"	1611	3A2012-W
		19' 1"	18' 6"	12' 4"	15' 10"	13' 9"	17' 3"	W16"X50#	7-1/8"	6' 6"	8"	1673	3A2015-W
	25'	24' 1"	23' 6"	9' 4"	12' 10"	10' 11"	14' 5"	W18"X55#	7-1/2"	6' 6"	8"	1861	3A2512-W
		24' 1"	23' 6"	12' 4"	15' 10"	13' 11"	17' 5"	W18"X55#	7-1/2"	6' 6"	8"	1949	3A2515-W
	30'	29' 1"	28' 6"	9' 4"	12' 10"	10' 11"	14' 5"	W18"X55#	7-1/2"	6' 6"	8"	2261	3A3012-W
		29' 1"	28' 6"	12' 4"	15' 10"	13' 11"	17' 5"	W18"X55#	7-1/2"	6' 6"	8"	2349	3A3015-W
	35'	34' 1"	33' 6"	9' 4"	12' 10"	11' 2"	14' 8"	W21"X68#	8-1/4"	6' 6"	8"	2991	3A3512-W
		34' 1"	33' 6"	12' 4"	15' 10"	14' 2"	17' 8"	W21"X68#	8-1/4"	6' 6"	8"	3079	3A3515-W
	40'	39' 1"	38' 6"	9' 4"	12' 10"	11' 5"	14' 11"	W24"X84#	9"	6' 6"	8"	3971	3A4012-W
		39' 1"	38' 6"	12' 4"	15' 10"	14' 5"	17' 11"	W24"X84#	9"	6' 6"	8"	4059	3A4015-W

A CAPACITY	B1 SPAN	B2 SPAN BETWEEN WHEEL CENTERS	C CLEAR SPAN	D1 HEIGHT UNDER BEAM		D2 OVERALL HEIGHT		E1 BEAM SIZE	E2 FLANGE WIDTH	F TREAD	G CASTER DIA.	NET WT. (LBS.)	MODEL
				Min.	Max.	Min.	Max.						
5 TON	10'	9' 1"	8' 6"	9' 4"	12' 10"	10' 2"	13' 8"	S10"X25.4#	4-5/8"	6' 6"	8"	1040	5A1012
		9' 1"	8' 6"	12' 4"	15' 10"	13' 2"	16' 8"	S10"X25.4#	4-5/8"	6' 6"	8"	1124	5A1015
	15'	14' 1"	13' 6"	9' 4"	12' 10"	10' 7"	14' 1"	S15"X42.9#	5-1/2"	6' 6"	8"	1430	5A1512
		14' 1"	13' 6"	12' 4"	15' 10"	13' 7"	17' 1"	S15"X42.9#	5-1/2"	6' 6"	8"	1514	5A1515
	20'	19' 1"	18' 6"	9' 4"	12' 10"	11' 5"	14' 11"	W24"X84#	9"	6' 6"	8"	2466	5A2012-W
		19' 1"	18' 6"	12' 4"	15' 10"	14' 5"	17' 11"	W24"X84#	9"	6' 6"	8"	2550	5A2015-W
	25'	24' 1"	23' 6"	9' 4"	12' 10"	11' 5"	14' 11"	W24"X84#	9"	6' 6"	8"	2886	5A2512-W
		24' 1"	23' 6"	12' 4"	15' 10"	14' 5"	17' 11"	W24"X84#	9"	6' 6"	8"	2970	5A2515-W
	30'	29' 1"	28' 6"	9' 4"	12' 10"	11' 5"	14' 11"	W24"X84#	9"	6' 6"	8"	3306	5A3012-W
		29' 1"	28' 6"	12' 4"	15' 10"	14' 5"	17' 11"	W24"X84#	9"	6' 6"	8"	3390	5A3015-W
	35'	34' 1"	33' 6"	9' 4"	12' 10"	11' 5"	14' 11"	W24"X103#	9"	6' 6"	8"	4085	5A3512-W
		34' 1"	33' 6"	12' 4"	15' 10"	14' 5"	17' 11"	W24"X103#	9"	6' 6"	8"	4787	5A3515-W
	40'	39' 1"	38' 6"	9' 4"	12' 10"	11' 5"	14' 11"	W24"X103#	9"	6' 6"	8"	5200	5A4012-W
		39' 1"	38' 6"	12' 4"	15' 10"	14' 5"	17' 11"	W24"X103#	9"	6' 6"	8"	5302	5A4015-W

A CAPACITY	B1 SPAN	B2 SPAN BETWEEN WHEEL CENTERS	C CLEAR SPAN	D1 HEIGHT UNDER BEAM		D2 OVERALL HEIGHT		E1 BEAM SIZE	E2 FLANGE WIDTH	F TREAD	G CASTER DIA.	NET WT. (LBS.)	MODEL
				Min.	Max.	Min.	Max.						
7½ TON	10'	9' 1"	8' 6"	9' 0"	13' 0"	10' 0"	14' 0"	S12"X31.8#	5"	6' 6"	12"	1398	7A1013
		9' 1"	8' 6"	12' 0"	16' 0"	13' 0"	17' 0"	S12"X31.8#	5"	6' 6"	12"	1500	7A1016
	15'	14' 1"	13' 6"	9' 0"	13' 0"	10' 6"	14' 6"	S18"X54.7#	6"	6' 6"	12"	1900	7A1513
		14' 1"	13' 6"	12' 0"	16' 0"	13' 6"	17' 6"	S18"X54.7#	6"	6' 6"	12"	2002	7A1516
	20'	19' 1"	18' 6"	9' 0"	13' 0"	10' 7"	14' 7"	S18"X54.7#*	6"	6' 6"	12"	2373	7A2013
		19' 1"	18' 6"	12' 0"	16' 0"	13' 7"	17' 7"	S18"X54.7#*	6"	6' 6"	12"	2475	7A2016
	25'	24' 1"	23' 6"	9' 0"	13' 0"	10' 7"	14' 7"	S18"X54.7#*	6"	6' 6"	12"	2480	7A2513
		24' 1"	23' 6"	12' 0"	16' 0"	13' 7"	17' 7"	S18"X54.7#*	6"	6' 6"	12"	2582	7A2516
	30'	29' 1"	28' 6"	9' 0"	13' 0"	11' 1"	15' 1"	S24"X80#	7"	6' 6"	12"	3519	7A3013
		29' 1"	28' 6"	12' 0"	16' 0"	14' 1"	18' 1"	S24"X80#	7"	6' 6"	12"	3621	7A3016
	35'	34' 1"	33' 6"	9' 0"	13' 0"	11' 1"	15' 1"	S24"X80#*	7"	6' 6"	12"	4415	7A3513
		34' 1"	33' 6"	12' 0"	16' 0"	14' 1"	18' 1"	S24"X80#*	7"	6' 6"	12"	4517	7A3516
	40'	39 1"	38' 6"	9' 0"	13' 0"	11' 1"	15' 1"	S24"X80#*	7"	6' 6"	12"	4892	7A4013
		39' 1"	38' 6"	12' 0"	16' 0"	14' 1"	18' 1"	S24"X80#*	7"	6' 6"	12"	4994	7A4016

A CAPACITY	B1 SPAN	B2 SPAN BETWEEN WHEEL CENTERS	C CLEAR SPAN	D1 HEIGHT UNDER BEAM		D2 OVERALL HEIGHT		E1 BEAM SIZE	E2 FLANGE WIDTH	F TREAD	G CASTER DIA.	NET WT. (LBS.)	MODEL
				Min.	Max.	Min.	Max.						
10 TON	10'	9' 1"	8' 6"	8' 11"	12' 11"	10' 5"	14' 5"	S18"X54.7#	6"	6' 6"	12"	1921	10A1013
		9' 1"	8' 6"	11' 11"	15' 11"	13' 5"	17' 5"	S18"X54.7#	6"	6' 6"	12"	2057	10A1016
	15'	14' 1"	13' 6"	8' 11"	12' 11"	10' 5"	14' 5"	S18"X54.7#	6"	6' 6"	12"	2194	10A1513
		14' 1"	13' 6"	11' 11"	15' 11"	13' 5"	17' 5"	S18"X54.7#	6"	6' 6"	12"	2330	10A1516
	20'	19' 1"	18' 6"	8' 11"	12' 11"	10' 11"	14' 11"	S24"X80#	7"	6' 6"	12"	2964	10A2013
		19' 1"	18' 6"	11' 11"	15' 11"	13' 11"	17' 11"	S24"X80#	7"	6' 6"	12"	3110	10A2016
	25'	24' 1"	23' 6"	8' 11"	12' 11"	11' 0"	15' 0"	S24"X80#*	7"	6' 6"	12"	3634	10A2513
		24' 1"	23' 6"	11' 11"	15' 11"	14' 0"	18' 0"	S24"X80#*	7"	6' 6"	12"	3770	10A2516
	30'	29' 1"	28' 6"	8' 11"	12' 11"	11' 0"	15' 0"	S24"X80#*	7"	6' 6"	12"	4395	10A3013
		29' 1"	28' 6"	11' 11"	15' 11"	14' 0"	18' 0"	S24"X80#*	7"	6' 6"	12"	4531	10A3016
	35'	34' 1"	33' 6"	8' 11"	12' 11"	11' 0"	15' 0"	S24"X80#*	7"	6' 6"	12"	4899	10A3513
		34' 1"	33' 6"	11' 11"	15' 11"	14' 0"	18' 0"	S24"X80#*	7"	6' 6"	12"	5035	10A3516
	40'	39' 1"	38' 6"	8' 11"	12' 11"	11' 0"	15' 0"	S24"X80#*	7"	6' 6"	12"	5402	10A4013
		39' 1"	38' 6"	11' 11"	15' 11"	14' 0"	18' 0"	S24"X80#*	7"	6' 6"	12"	5538	10A4016

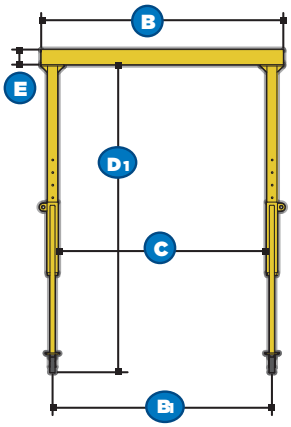

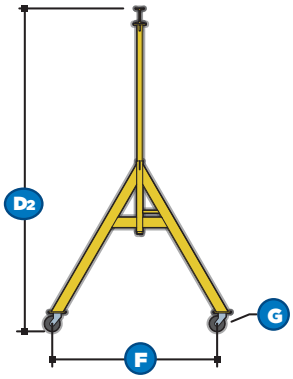

SPANCO GANTRY CRANES

A Series
Steel, Fixed-Height

A CAPACITY	B1 SPAN	B2 SPAN BETWEEN WHEEL CENTERS	C CLEAR SPAN	D1 HEIGHT UNDER BEAM	D2 OVERALL HEIGHT	E1 BEAM SIZE	E2 FLANGE WIDTH	F TREAD	G CASTER DIA.	NET WT. (LBS.)	MODEL
1 TON	8'	7' 3"	6' 11"	10' 0"	10' 6"	S6"X12.5#	3-3/8"	5' 5"	6"	320	1F0810
	10'	9' 3"	8' 11"	10' 0"	10' 6"	S6"X12.5#	3-3/8"	5' 5"	6"	345	1F1010
	12'	11' 3"	10' 11"	10' 0"	10' 6"	S6"X12.5#	3-3/8"	5' 5"	6"	370	1F1210
	15'	14' 3"	13' 11"	10' 0"	10' 8"	S8"X18.4#	4"	5' 5"	6"	450	1F1510
	20'	19' 3"	18' 11"	10' 0"	10' 11"	W10"X30#	5-3/4"	5' 5"	6"	820	1F2010-W
	25'	24' 3"	23' 11"	10' 0"	10' 11"	W10"X30#	5-3/4"	5' 5"	6"	970	1F2510-W
	30'	29' 3"	28' 10"	10' 0"	10' 11"	W10"X30#	5-3/4"	6' 6"	8"	1120	1F3010-W
	35'	34' 1"	33' 8"	10' 0"	11' 5"	W16"X50#	7-1/8"	6' 6"	8"	1970	1F3510-W
	40'	39' 1"	38' 8"	10' 0"	11' 5"	W16"X50#	7-1/8"	6' 6"	8"	2220	1F4010-W

A CAPACITY	B1 SPAN	B2 SPAN BETWEEN WHEEL CENTERS	C CLEAR SPAN	D1 HEIGHT UNDER BEAM	D2 OVERALL HEIGHT	E1 BEAM SIZE	E2 FLANGE WIDTH	F TREAD	G CASTER DIA.	NET WT. (LBS.)	MODEL
2 TON	10'	9' 3"	8' 10"	10' 0"	10' 8"	S8"X18.4#	4"	6' 6"	8"	612	2F1010
	15'	14' 3"	13' 10"	10' 0"	10' 10"	S10"X25.4#	4-5/8"	6' 6"	8"	809	2F1510
	20'	19' 3"	18' 10"	10' 0"	11' 1"	W12"X35#	6-1/2"	6' 6"	8"	1128	2F2010-W
	25'	24' 3"	23' 10"	10' 0"	11' 1"	W12"X35#	6-1/2"	6' 6"	8"	1303	2F2510-W
	30'	29' 1"	28' 8"	10' 0"	11' 5"	W16"X50#	7-1/8"	6' 6"	8"	1928	2F3010-W
	35'	34' 1"	33' 8"	10' 0"	11' 7"	W18"X55#	7-1/2"	6' 6"	8"	2353	2F3510-W
	40'	39' 1"	38' 8"	10' 0"	11' 5"	W16"X50#*	7-1/8"	6' 6"	8"	2829	2F4010-W

A CAPACITY	B1 SPAN	B2 SPAN BETWEEN WHEEL CENTERS	C CLEAR SPAN	D1 HEIGHT UNDER BEAM	D2 OVERALL HEIGHT	E1 BEAM SIZE	E2 FLANGE WIDTH	F TREAD	G CASTER DIA.	NET WT. (LBS.)	MODEL
3 TON	10'	9' 3"	8' 7"	12' 10"	13' 8"	S10"X25.4#	4-5/8"	6' 6"	8"	739	3F1012
	15'	14' 3"	13' 7"	12' 10"	13' 8"	S10"X25.4#	4-5/8"	6' 6"	8"	936	3F1512
	20'	19' 3"	18' 7"	12' 10"	14' 3"	W16"X50#	7-1/8"	6' 6"	8"	1555	3F2012-W
	25'	24' 1"	23' 7"	12' 10"	14' 3"	W16"X50#	7-1/8"	6' 6"	8"	1805	3F2512-W
	30'	29' 1"	28' 7"	12' 10"	14' 5"	W18"X55#	7-1/2"	6' 6"	8"	2205	3F3012-W
	35'	34' 1"	33' 7"	12' 10"	14' 8"	W21"X68#	8-1/4"	6' 6"	8"	2935	3F3512-W
	40'	39' 1"	38' 7"	12' 10"	14' 11"	W24"X84#	9"	6' 6"	8"	3915	3F4012-W

A CAPACITY	B1 SPAN	B2 SPAN BETWEEN WHEEL CENTERS	C CLEAR SPAN	D1 HEIGHT UNDER BEAM	D2 OVERALL HEIGHT	E1 BEAM SIZE	E2 FLANGE WIDTH	F TREAD	G CASTER DIA.	NET WT. (LBS.)	MODEL
5 TON	10'	9' 1"	8' 7"	15' 10"	16' 8"	S10"X25.4#	4-5/8"	6' 6"	8"	1060	5F1015
	15'	14' 1"	13' 7"	15' 10"	17' 1"	S15"X42.9#	5-1/2"	6' 6"	8"	1450	5F1515
	20'	19' 1"	18' 7"	15' 10"	17' 11"	W24"X84#	9"	6' 6"	8"	2486	5F2015-W
	25'	24' 1"	23' 7"	15' 10"	17' 11"	W24"X84#	9"	6' 6"	8"	2906	5F2515-W
	30'	29' 1"	28' 7"	15' 10"	17' 11"	W24"X84#	9"	6' 6"	8"	3326	5F3015-W
	35'	34' 1"	33' 7"	15' 10"	17' 11"	W24"X103#	9"	6' 6"	8"	4411	5F3515-W
	40'	39' 1"	38' 7"	15' 10"	17' 11"	W24"X103#	9"	6' 6"	8"	4926	5F4015-W

A CAPACITY	B1 SPAN	B2 SPAN BETWEEN WHEEL CENTERS	C CLEAR SPAN	D1 HEIGHT UNDER BEAM	D2 OVERALL HEIGHT	E1 BEAM SIZE	E2 FLANGE WIDTH	F TREAD	G CASTER DIA.	NET WT. (LBS.)	MODEL
7½ TON	10'	9' 1"	8' 7"	16' 0"	17' 0"	S12"X31.8#	5"	6' 6"	12"	1437	7F1016
	15'	14' 1"	13' 7"	16' 0"	17' 6"	S18"X54.7#	6"	6' 6"	12"	1938	7F1516
	20'	19' 1"	18' 7"	16' 0"	17' 6"	S18"X54.7#*	6"	6' 6"	12"	2411	7F2016
	25'	24' 1"	23' 7"	16' 0"	17' 6"	S18"X54.7#*	6"	6' 6"	12"	3004	7F2516
	30'	29' 1"	28' 7"	16' 0"	18' 0"	S24"X84#*	7"	6' 6"	12"	4140	7F3016
	35'	34' 1"	33' 7"	16' 0"	18' 0"	S24"X84#*	7"	6' 6"	12"	4643	7F3516
	40'	39' 1"	38' 7"	16' 0"	18' 0"	S24"X84#*	7"	6' 6"	12"	5146	7F4016

A CAPACITY	B1 SPAN	B2 SPAN BETWEEN WHEEL CENTERS	C CLEAR SPAN	D1 HEIGHT UNDER BEAM	D2 OVERALL HEIGHT	E1 BEAM SIZE	E2 FLANGE WIDTH	F TREAD	G CASTER DIA.	NET WT. (LBS.)	MODEL
10 TON	10'	9' 1"	8' 7"	16' 0"	17' 6"	S18"X54.7#	6"	6' 6"	12"	1957	10F1016
	15'	14' 1"	13' 7"	16' 0"	17' 6"	S18"X54.7#	6"	6' 6"	12"	2230	10F1516
	20'	19' 1"	18' 7"	16' 0"	18' 0"	S24"X84#	7"	6' 6"	12"	3010	10F2016
	25'	24' 1"	23' 7"	16' 0"	18' 0"	S24"X84#*	7"	6' 6"	12"	3670	10F2516
	30'	29' 1"	28' 7"	16' 0"	18' 0"	S24"X84#*	7"	6' 6"	12"	4431	10F3016
	35'	34' 1"	33' 7"	16' 0"	18' 0"	S24"X84#*	7"	6' 6"	12"	4935	10F3516
	40'	39' 1"	38' 7"	16' 0"	18' 0"	S24"X84#*	7"	6' 6"	12"	5439	10F4016

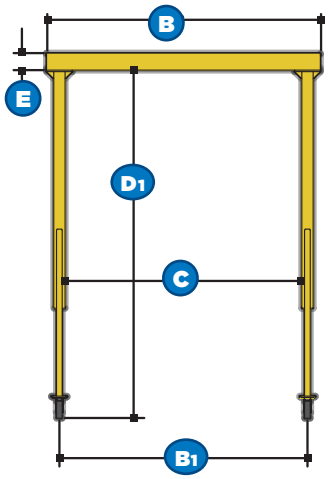

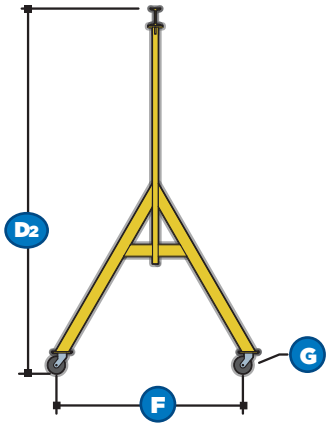

SPANCO

GANTRY CRANES

A Series

Aluminum Adjustable Height & Span

A CAPACITY	B1 SPAN	B2 SPAN BETWEEN WHEEL CENTERS	C CLEAR SPAN	D1 HEIGHT UNDER BEAM		D2 OVERALL HEIGHT		E1 BEAM SIZE	E2 FLANGE WIDTH	F TREAD	G CASTER DIA.	NET WT. (LBS.)	MODEL
				Min.	Max.	Min.	Max.						
½ TON	8'	7' 3"	6' 11"	6' 6"	9' 0"	6' 11"	9' 5"	ALU5"X3.43#	3"	4' 2"	6"	116	0.5ALU0809
		7' 3"	6' 11"	8' 6"	11' 0"†	8' 11"	11' 5"	ALU5"X3.43#	3"	4' 2"	6"	135	0.5ALU0811
	10'	9' 3"	8' 11"	6' 6"	9' 0"	7' 0"	9' 6"	ALU6"X4.3#	3-3/8"	4' 2"	6"	131	0.5ALU1009
		9' 3"	8' 11"	8' 6"	11' 0"†	9' 0"	11' 6"	ALU6"X4.3#	3-3/8"	4' 2"	6"	150	0.5ALU1011
	12'	11' 3"	10' 11"	6' 6"	9' 0"	7' 2"	9' 8"	ALU8"X6.35#	4"	4' 2"	6"	164	0.5ALU1209
		11' 3"	10' 11"	8' 6"	11' 0"†	9' 2"	11' 8"	ALU8"X6.35#	4"	4' 2"	6"	183	0.5ALU1211
	15'	14' 3"	13' 11"	6' 6"	9' 0"	7' 2"	9' 8"	ALU8"X6.35#	4"	4' 2"	6"	192	0.5ALU159
		14' 3"	13' 11"	8' 6"	11' 0"†	9' 2"	11' 8"	ALU8"X6.35#	4"	4' 2"	6"	211	0.5ALU1511

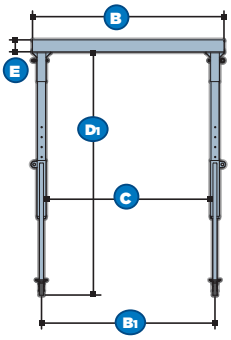

A CAPACITY	B1 SPAN	B2 SPAN BETWEEN WHEEL CENTERS	C CLEAR SPAN	D1 HEIGHT UNDER BEAM		D2 OVERALL HEIGHT		E1 BEAM SIZE	E2 FLANGE WIDTH	F TREAD	G CASTER DIA.	NET WT. (LBS.)	MODEL
				Min.	Max.	Min.	Max.						
1 TON	8'	7' 3"	6' 10"	5' 7"	8' 1"	6' 1"	8' 7"	ALU6"X4.3#	3-3/8"	4' 6"	6"	150	1ALU0808
		7' 3"	6' 10"	7' 7"	10' 1"	8' 1"	10' 7"	ALU6"X4.3#	3-3/8"	4' 6"	6"	157	1ALU0810
		7' 3"	6' 10"	9' 7"	12' 1"†	10' 1"†	12' 7"†	ALU6"X4.3#	3-3/8"	4' 6"	6"	197	1ALU0812
	10'	9' 3"	8' 10"	5' 7"	8' 1"	6' 3"	8' 9"	ALU8"X6.35#	4"	4' 6"	6"	180	1ALU1008
		9' 3"	8' 10"	7' 7"	10' 1"	8' 3"	10' 9"	ALU8"X6.35#	4"	4' 6"	6"	187	1ALU1010
		9' 3"	8' 10"	9' 7"	12' 1"†	10' 3"†	12' 9"†	ALU8"X6.35#	4"	4' 6"	6"	227	1ALU1012
	12'	11' 3"	10' 10"	5' 7"	8' 1"	6' 3"	8' 9"	ALU8"X6.35#	4"	4' 6"	6"	192	1ALU1208
		11' 3"	10' 10"	7' 7"	10' 1"	8' 3"	10' 9"	ALU8"X6.35#	4"	4' 6"	6"	199	1ALU1210
		11' 3"	10' 10"	9' 7"	12' 1"†	10' 3"†	12' 9"†	ALU8"X6.35#	4"	4' 6"	6"	239	1ALU1212
	15'	14' 3"	13' 10"	5' 7"	8' 1"	6' 5"	8' 11"	ALU10"X8.76#	4-5/8"	4' 6"	6"	248	1ALU1508
		14' 3"	13' 10"	7' 7"	10' 1"	8' 5"	10' 11"	ALU10"X8.76#	4-5/8"	4' 6"	6"	255	1ALU1510
		14' 3"	13' 10"	9' 7"	12' 1"†	10' 5"†	12' 11"†	ALU10"X8.76#	4-5/8"	4' 6"	6"	295	1ALU1512
	18'	17' 3"	16' 9"	5' 10"	8' 4"	6' 11"	9' 5"	ALU12"X10.99#*	5"	4' 4"	6"	389	1ALU1808
		17' 3"	16' 9"	7' 10"	10' 4"	8' 11"	11' 5"	ALU12"X10.99#*	5"	4' 4"	6"	401	1ALU1810
		17' 3"	16' 9"	9' 10"	12' 4"†	10' 11"†	13' 5"†	ALU12"X10.99#*	5"	4' 4"	6"	441	1ALU1812
	20'	19' 3"	18' 9"	5' 10"	8' 4"	6' 11"	9' 5"	ALU12"X10.99#*	5"	4' 4"	6"	423	1ALU2008
		19' 3"	18' 9"	7' 10"	10' 4"	8' 11"	11' 5"	ALU12"X10.99#*	5"	4' 4"	6"	435	1ALU2010
		19' 3"	18' 9"	9' 10"	12' 4"†	10' 11"†	13' 5"†	ALU12"X10.99#*	5"	4' 4"	6"	475	1ALU2012

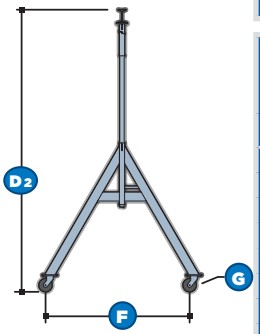

A CAPACITY	B1 SPAN	B2 SPAN BETWEEN WHEEL CENTERS	C CLEAR SPAN	D1 HEIGHT UNDER BEAM		D2 OVERALL HEIGHT		E1 BEAM SIZE	E2 FLANGE WIDTH	F TREAD	G CASTER DIA.	NET WT. (LBS)	MODEL
				Min.	Max.	Min.	Max.						
2 TON	8'	7' 3"	6' 9"	5' 10"	8' 4"	6' 6"	9' 0"	ALU8"X6.35#	4"	4' 4"	8"	237	2ALU0808
		7' 3"	6' 9"	7' 10"	10' 4"	8' 6"	11' 0"	ALU8"X6.35#	4"	4' 4"	8"	246	2ALU0810
		7' 3"	6' 9"	9' 10"†	12' 4"†	10' 6"†	13' 0"†	ALU8"X6.35#	4"	4' 4"	8"	276	2ALU0812
	10'	9' 3"	8' 9"	5' 10"	8' 4"	6' 8"	9' 2"	ALU10"X6.35#	4-5/8"	4' 4"	8"	274	2ALU1008
		9' 3"	8' 9"	7' 10"	10'- 4"	8' 8"	11' 2"	ALU10"X6.35#	4-5/8"	4' 4"	8"	286	2ALU1010
		9' 3"	8' 9"	9' 10"†	12' 4"†	10' 8"†	13' 2"†	ALU10"X6.35#	4-5/8"	4' 4"	8"	313	2ALU1012
	12'	11' 3"	10' 9"	5' 10"	8' 4"	6' 10"	9' 4"	ALU12"X10.99#	5"	4' 4"	8"	322	2ALU1208
		11' 3"	10' 9"	7' 10"	10' 4"	8' 10"	11' 4"	ALU12"X10.99#	5"	4' 4"	8"	334	2ALU1210
		11' 3"	10' 9"	9' 10"†	12' 4"†	10' 10"†	13' 4"†	ALU12"X10.99#	5"	4' 4"	8"	361	2ALU1212
	15'	14' 3"	13' 9"	5' 10"	8' 4"	6' 10"	9' 4"	ALU12"X10.99#	5"	4' 4"	8"	355	2ALU1508
		14' 3"	13' 9"	7' 10"	10' 4"	8' 10"	11' 4"	ALU12"X10.99#	5"	4' 4"	8"	367	2ALU1510
		14' 3"	13' 9"	9' 10"†	12' 4"†	10' 10"†	13' 4"†	ALU12"X10.99#	5"	4' 4"	8"	394	2ALU1512

A CAPACITY	B1 SPAN	B2 SPAN BETWEEN WHEEL CENTERS	C CLEAR SPAN	D1 HEIGHT UNDER BEAM		D2 OVERALL HEIGHT		E1 BEAM SIZE	E2 FLANGE WIDTH	F TREAD	G CASTER DIA.	NET WT. (LBS.)	MODEL
				Min.	Max.	Min.	Max.						
3 TON	8'	7' 2"	6' 8-1/2"	6' 2"	8' 2"	7' 2"	9' 2"	ALU12"X10.99#	5"	4' 8"	8"	350	3ALU0808
		7' 2"	6' 8-1/2"	7' 8"	10' 2"	8' 8"	11' 2"	ALU12"X10.99#	5"	4' 8"	8"	369	3ALU0810
		7' 2"	6' 8-1/2"	9' 8"†	12' 2"†	10' 8"†	13' 2"†	ALU12"X10.99#	5"	4' 8"	8"	416	3ALU0812
	10'	9' 2"	8' 8-1/2"	6' 2"	8' 2"	7' 2"	9' 2"	ALU12"X10.99#	5"	4' 8"	8"	372	3ALU1008
		9' 2"	8' 8-1/2"	7' 8"	10' 2"	8' 8"	11' 2"	ALU12"X10.99#	5"	4' 8"	8"	391	3ALU1010
		9' 2"	8' 8-1/2"	9' 8"†	12' 2"†	10' 8"†	13' 2"†	ALU12"X10.99#	5"	4' 8"	8"	438	3ALU1012
	12'	11' 2"	10' 8-1/2"	6' 2"	8' 2"	7' 3"	9' 3"	ALU12"X10.99#	5"	4' 8"	8"	426	3ALU1208
		11' 2"	10' 8-1/2"	7' 8"	10' 2"	8' 9"	11' 3"	ALU12"X10.99#	5"	4' 8"	8"	445	3ALU1210
		11' 2"	10' 8-1/2"	9' 8"†	12' 2"†	10' 9"†	13' 3"†	ALU12"X10.99#*	5"	4' 8"	8"	491	3ALU1212
	15'	14' 2"	13' 8-1/2"	6' 2"	8' 2"	7' 3"	9' 3"	ALU12"X10.99#*	5"	4' 8"	8"	467	3ALU1508
		14' 2"	13' 8-1/2"	7' 8"	10' 2"	8' 9"	11' 3"	ALU12"X10.99#*	5"	4' 8"	8"	479	3ALU1510
		14' 2"	13' 8-1/2"	9' 8"†	12' 2"†	10' 9"†	13' 3"†	ALU12"X10.99#*	5"	4' 8"	8"	532	3ALU1512

* Capped Beam

† 2' Height Extension Kit Included

SPANCO ALUMINUM SERIES GANTRY CRANES

Aluminum	Capacities	Heights Under I-Beam	Span Lengths*
Aluminum	Up to 3 tons	Up to 12′-2″	Up to 20′

**Longer custom spans available*

With systems as light as 116 pounds, just one workers can typically carry, assemble, and precisely position a Spanco Aluminum Gantry Crane almost anywhere — including rooftops. Designed to easily fit into or on top of most service trucks, these lightweight gantries carry up to 3 tons and are popular with contractors and in the HVAC industry.

OPTIONS FOR ALUMINUM GANTRY CRANES

Caster Options:

- Wheel brakes on polyurethane casters
- Steel V-groove casters with rigid body for use on V-groove tracks
- Pneumatic Tires: Either single or dual; perfect for soft roofs
- Height Adjustment Winch-Hoist Kits: Includes two LUG-ALL™ cable winch-hoists to quickly and easily change I-beam height. Note: Only for use on Spanco A Series Gantry Cranes (including Aluminum & All-Steel models). Always use under no-load condiitons.

Two workers adjusting the height on an aluminum gantry crane using a Lug-All Winch Hoist.

Optional dual pneumatic tires

Height adjustment via spring-loaded, steel locking pin

A 2-ton Spanco Aluminum Gantry Crane lifting the top portion of a grill for quick assembly.

GANTRY CRANES
E SERIES

DURABLE & ECONOMICAL

Spanco® E Series Gantry Cranes are straightforward, durable, dependent lifting solutions.

"E" stands for "Economical" — but don't be confused. These gantry cranes heavy-duty, industrial-grade cranes designed for long service life.

- Made from high-strength, square mechanical tubing.
- Fully-braced uprights for solid I-beam positioning.
- Equipped with swivel casters with durable, moldon polyurethane wheels for easy rolling and excellent floor protection.

A Spanco E Series Fixed-Height Gantry Crane used for military vehicle maintenance in Afghanistan.

SPANCO E SERIES GANTRY CRANES

E Series	Capacities	Heights Under I-Beam	Span Lengths*
Fixed Height	Up to 5 tons	10′	12′
Adjustable Height & Span	Up to 5 tons	Up to 14′	11′-6″

**Longer custom spans available*

Spanco E Series Gantry Cranes are popular among welders and other fabricators needing simple, stable, highly mobile lifting solutions

OPTIONS FOR E SERIES GANTRY CRANES

Adjustable Height Cranes:

- Adjust height of I-beam in 6-inch increments. Adjustable models have lifting capacities up to 3 tons.

Caster Options:

- Wheel brakes on polyurethane casters
- Steel V-groove casters with rigid body for use on V-tracks

Important Notes About The E Series

1) Even though these economical gantry cranes are highly affordable, they are manufactured in accordance with of the following standards set for crane manufacturers: CMAA, AWS, and OSHA.

2) Spanco E Series Gantry Cranes are not for use with motor-driven hoist trolleys.

3) These gantry cranes are manually propelled (only). For motorized gantry travel options, please see our Spanco PF Series (page 26), and Power Drive Kits (page 36).

A 1-Ton Spanco E Series Gantry Crane lifting heavy parts from the back of a truck bed.

SPANCO GANTRY CRANES

E SERIES
Steel Fixed-Height

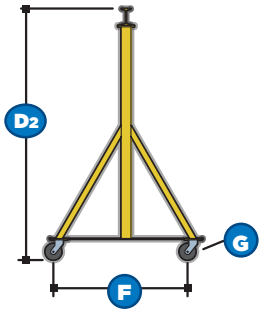

A CAPACITY	B1 SPAN	B2 SPAN BETWEEN WHEEL CENTERS	C CLEAR SPAN	D1 HEIGHT UNDER BEAM	D2 OVERALL HEIGHT	E1 BEAM TYPE	E2 FLANGE WIDTH	F TREAD	G CASTER DIA.	NET WT. (LBS.)	MODEL
1 TON	12'	11' 3"	10' 11"	10' 0"	10' 6"	S6"X12.5#	3-3/8"	64"	6"	354#	F2000
2 TON	12'	11' 3"	10' 11"	10' 0"	10' 8"	S8"X18.4#	4"	64"	8"	580#	F4000
3 TON	12'	11' 3"	10' 10"	10' 0"	10' 10"	S10"X25.4#	4-5/8"	64"	8"	719#	F6000
5 TON	12'	11' 1"	10' 7"	10' 0"	11' 0"	S12"X31.8#	5"	64"	8"	925#	F10000

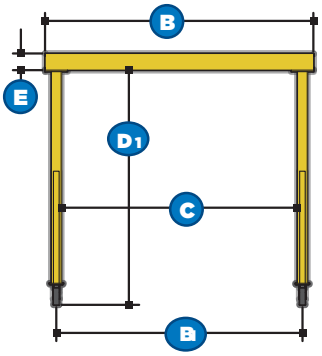

E SERIES
Steel with Adjustable Height & Span

A CAPACITY	B1 SPAN	C CLEAR SPAN		D1 HEIGHT UNDER BEAM		D2 OVERALL HEIGHT		E1 BEAM SIZE	E2 FLANGE WIDTH	F TREAD	G CASTER DIA.	NET WT. (LBS.)	MODEL
		Min.	Max.	Min.	Max.	Min.	Max.						
1 TON	11'-6"	4' 0"	10' 6"	4' 4"	7' 0"	4' 10"	7' 6"	S6"X12.5#	3-3/8"	4' 0"	6"	351	1AW1007
		4' 0"	10' 6"	5' 4"	9' 0"	5' 10"	9' 6"	S6"X12.5#	3-3/8"	5' 0"	6"	394	1AW1009
		4' 0"	10' 6"	5' 10"	10' 0"	6' 4"	10' 6"	S6"X12.5#	3-3/8"	5' 6"	6"	415	1AW1010
		4' 0"	10' 6"	6' 10"	12' 0"	7' 4"	12' 6"	S6"X12.5#	3-3/8"	6' 6"	6"	433	1AW1012
		4' 0"	10' 6"	7' 10"	14' 0"	8' 4"	14' 6"	S6"X12.5#	3-3/8"	7' 6"	6"	504	1AW1014

A CAPACITY	B1 SPAN	C CLEAR SPAN		D1 HEIGHT UNDER BEAM		D2 OVERALL HEIGHT		E1 BEAM SIZE	E2 FLANGE WIDTH	F TREAD	G CASTER DIA.	NET WT. (LBS.)	MODEL
		Min.	Max.	Min.	Max.	Min.	Max.						
2 TON	11'-6"	4' 0"	10' 6"	4' 6"	7' 2"	5' 2"	7' 10"	S8"X18.4#	4"	4' 0"	8"	443	2AW1007
		4' 0"	10' 6"	5' 6"	9' 2"	6' 2"	9' 10"	S8"X18.4#	4"	5' 0"	8"	479	2AW1009
		4' 0"	10' 6"	6' 0"	10' 2"	6' 8"	10' 10"	S8"X18.4#	4"	5' 6"	8"	538	2AW1010
		4' 0"	10' 6"	7' 0"	12' 2"	7' 8"	12' 10"	S8"X18.4#	4"	6' 6"	8"	588	2AW1012
		4' 0"	10' 5"	8' 0"	14' 2"	8' 8"	14' 10"	S8"X18.4#	4"	7' 6"	8"	748	2AW1014

A CAPACITY	B1 SPAN	C CLEAR SPAN		D1 HEIGHT UNDER BEAM		D2 OVERALL HEIGHT		E1 BEAM SIZE	E2 FLANGE WIDTH	F TREAD	G CASTER DIA.	NET WT. (LBS.)	MODEL
		Min.	Max.	Min.	Max.	Min.	Max.						
3 TON	11'-6"	4' 0"	10' 6"	4' 4"	7' 0"	5' 2"	7' 10"	S10"X25.4#	4-5/8"	4' 0"	8"	543	3AW1007
		4' 0"	10' 6"	5' 4"	9' 0"	6' 2"	9' 10"	S10"X25.4#	4-5/8"	5' 0"	8"	658	3AW1009
		4' 0"	10' 6"	5' 10"	10' 0"	6' 8"	10' 10"	S10"X25.4#	4-5/8"	5' 6"	8"	694	3AW1010
		4' 0"	10' 6"	6' 10"	12' 0"	7' 8"	12' 10"	S10"X25.4#	4-5/8"	6' 6"	8"	803	3AW1012
		4' 0"	10' 6"	7' 0"	14' 0"	8' 8"	14' 10"	S10"X25.4#	4-5/8"	7' 6"	8"	881	3AW1014

HIGH-CAPACITY LIFT SOLUTIONS

GANTRY CRANES
PF SERIES

Spanco® PF Series Gantry Cranes offer high-capacity, high-height, long-span, economical lifting solutions.

These strong, portal frame (PF) cranes are ideal when:

- Your building can't support jib cranes or overhead cranes. Spanco PF Gantry Cranes are self-supporting and travel directly on the floor.
- Your lifting volume is moderate and can't justify more expensive, permanently installed cranes. Standard PF Gantry Cranes are CMAA Class C service.
- You need an economical, versatile lifting system to supplement your existing overhead cranes.
- You lease your facility; Spanco PF Gantry Cranes require no footer or floor penetration or concrete foundation.
- Your plant has been "making do" with multiple forklifts, which is unsafe, inefficient, and time consuming.

A 7.5-ton Motorized Spanco PF Gantry Crane used to move truckloads of long steel beams at a building material supply center

Three track-mounted PF Series Gantry Cranes mounted over rail cars for easy maintenance and repair. The track mount ensures smooth travel over a fixed route for increased productivity and ease-of-use.

SPANCO GANTRY CRANES

SPANCO PF SERIES GANTRY CRANES

PF Series	Capacities	Heights Under I-Beam	Span Lengths*
PF Series	Up to 15 tons	Up to 35′	Up to 40′

**Longer custom spans available*

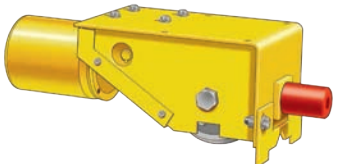

For more information about track options and power drive options for the PF Series, please turn to pages 34 & 35

POWER DRIVE OPTIONS FOR PF SERIES GANTRY CRANES

V-Track Drives: Two motors drive rigid steel V-groove wheels along a fixed path.

Guide Angle Drives: Ideal for installations where gantry runs along a wall.

Truly Trackless Drives: Perfect for busy factory floors or when you need to keep your shop floor clear of tracks or angle guides.

Drive Optionfor PF Series Gantry Cranes

- Motor brakes
- Air-driven power drive kits
- Crane controls
- Push-button stations
- Control enclosures suitable for severe environments or hazardous areas
- Warning lights, audible alarms, or travel limit switches
- Crane wiring with rubber-covered S.O. type cable or in metal conduit
- Cable reels and electrification systems
- Festooning systems: tag line, flat cable, and box track

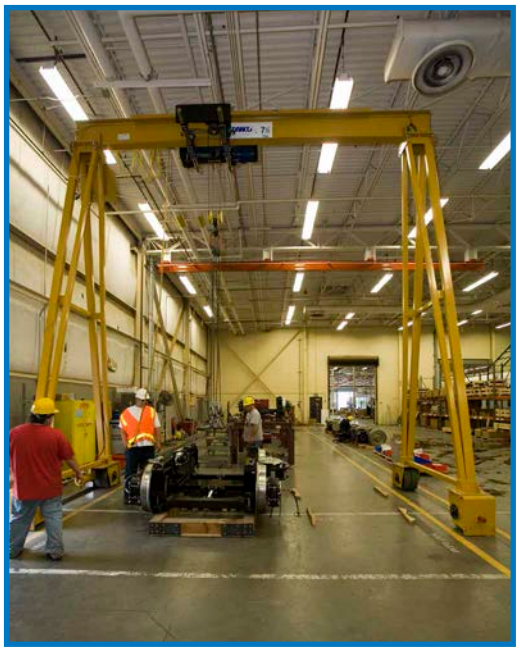

A 7.5-ton PF Gantry Crane with a Spanco Guide Angle Power Drive Kit & Guide Rollers for high-volume, high-capacity travel along a fixed path.

PF SERIES
All-Steel Construction

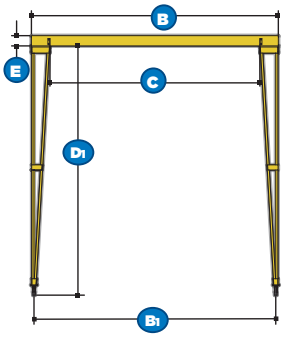

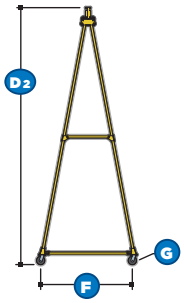

A CAPACITY	B SPAN	C CLEAR SPAN	D1 HEIGHT UNDER BEAM	D2 OVERALL HEIGHT	E1 BEAM SIZE	E2 FLANGE WIDTH	F TREAD	G CASTER DIA.	NET WT (LBS.)	MODEL
1 TON	15′	12' 0"	20' 0"	20' 8"	S8"X18.4#	4"	7' 6"	8"	814	1PF1520
		12' 0"	25' 0"	25' 8"	S8"X18.4#	4"	9' 4"	8"	1323	1PF1525
		11' 0"	30' 0"	30' 8"	S8"X18.4#	4"	11' 3"	8"	1765	1PF1530
		11' 0"	35' 0"	35' 8"	S8"X18.4#	4"	13' 2"	8"	2017	1PF1535
	20′	17' 0"	20' 0"	20' 10"	S10"X25.4#	4-5/8"	7' 6"	8"	1046	1PF2020
		17' 0"	25' 0"	25' 10"	S10"X25.4#	4-5/8"	9' 4"	8"	1555	1PF2025
		16' 0"	30' 0"	30' 10"	S10"X25.4#	4-5/8"	11' 3"	8"	2079	1PF2030
		16' 0"	35' 0"	35' 10"	S10"X25.4#	4-5/8"	13' 1"	8"	2297	1PF2035
	25′	21' 0"	20' 0"	21' 0"	S12"X31.8#	5"	7' 6"	8"	1333	1PF2520
		21' 0"	25' 0"	26' 0"	S12"X31.8#	5"	9' 4"	8"	1874	1PF2525
		21' 0"	30' 0"	31' 0"	S12"X31.8#	5"	11' 1"	8"	2366	1PF2530
		21' 0"	35' 0"	36' 0"	S12"X31.8#	5"	13' 1"	8"	2584	1PF2535
	30′	26' 0"	20' 0"	21' 3"	S15"X42.9#	5-1/2"	7' 6"	8"	1838	1PF3020
		26' 0"	25' 0"	26' 3"	S15"X42.9#	5-1/2"	9' 4"	8"	2376	1PF3025
		26' 0"	30' 0"	31' 3"	S15"X42.9#	5-1/2"	11' 3"	8"	2858	1PF3030
		25' 0"	35' 0"	36' 3"	S15"X42.9#	5-1/2"	13' 1"	8"	3081	1PF3035
	35′	31' 0"	20' 0"	21' 4"	S15"X42.9#*	5-1/2"	7' 6"	8"	2447	1PF3520
		31' 0"	25' 0"	26' 4"	S15"X42.9#*	5-1/2"	9' 4"	8"	2957	1PF3525
		30' 0"	30' 0"	31' 4"	S15"X42.9#*	5-1/2"	11' 1"	8"	3439	1PF3530
		30' 0"	35' 0"	36' 4"	S15"X42.9#*	5-1/2"	13' 1"	8"	3662	1PF3535
	40′	35' 0"	20' 0"	21' 4"	S15"X42.9#*	5-1/2"	7' 6"	8"	2767	1PF4020
		35' 0"	25' 0"	26' 4"	S15"X42.9#*	5-1/2"	9' 4"	8"	3275	1PF4025
		35' 0"	30' 0"	31' 4"	S15"X42.9#*	5-1/2"	11' 4"	8"	3751	1PF4030
		35' 0"	35' 0"	36' 4"	S15"X42.9#*	5-1/2"	13' 2"	8"	3970	1PF4035

A CAPACITY	B SPAN	C CLEAR SPAN	D1 HEIGHT UNDER BEAM	D2 OVERALL HEIGHT	E1 BEAM SIZE	E2 FLANGE WIDTH	F TREAD	G CASTER DIA.	NET WT (LBS.)	MODEL
2 TON	15′	12' 0"	20' 0"	20' 10"	S10"X25.4#	4-5/8"	7' 5"	8"	1171	2PF1520
		12' 0"	25' 0"	25' 10"	S10"X25.4#	4-5/8"	9' 4"	8"	1526	2PF1525
		12' 0"	30' 0"	30' 10"	S10"X25.4#	4-5/8"	11' 2"	8"	2026	2PF1530
		11' 0"	35' 0"	35' 10"	S10"X25.4#	4-5/8"	13' 1"	8"	2215	2PF1535
	20′	17' 0"	20' 0"	21' 0"	S12"X31.8#	5"	7' 5"	8"	1426	2PF2020
		17' 0"	25' 0"	26' 0"	S12"X31.8#	5"	9' 4"	8"	1781	2PF2025
		17' 0"	30' 0"	31' 0"	S12"X31.8#	5"	11' 2"	8"	2281	2PF2030
		16' 0"	35' 0"	36' 0"	S12"X31.8#	5"	13' 1"	8"	2215	2PF2035
	25′	21' 0"	20' 0"	21' 3"	S15"X42.9#	5-1/2"	7' 5"	8"	1932	2PF2520
		21' 0"	25' 0"	26' 3"	S15"X42.9#	5-1/2"	9' 4"	8"	2176	2PF2525
		21' 0"	30' 0"	31' 3"	S15"X42.9#	5-1/2"	11' 2"	8"	2718	2PF2530
		21' 0"	35' 0"	36' 3"	S15"X42.9#	5-1/2"	13' 1"	8"	2907	2PF2535
	30′	26' 0"	20' 0"	21' 6"	S18"X54.7#	6"	7' 5"	8"	2500	2PF3020
		26' 0"	25' 0"	26' 6"	S18"X54.7#	6"	9' 4"	8"	2744	2PF3025
		26' 0"	30' 0"	31' 6"	S18"X54.7#	6"	11' 2"	8"	3286	2PF3030
		25' 0"	35' 0"	36' 6"	S18"X54.7#	6"	13' 1"	8"	3480	2PF3035
	35′	31' 0"	20' 0"	21' 7"	S18"X54.7#*	6"	7' 5"	8"	3126	2PF3520
		31' 0"	25' 0"	26' 7"	S18"X54.7#*	6"	9' 4"	8"	3370	2PF3525
		30' 0"	30' 0"	31' 7"	S18"X54.7#*	6"	11' 2"	8"	3912	2PF3530
		30' 0"	35' 0"	36' 7"	S18"X54.7#*	6"	13' 1"	8"	4106	2PF3535
	40′	35' 0"	20' 0"	21' 7"	S18"X54.7#*	6"	7' 5"	8"	3513	2PF4020
		35' 0"	25' 0"	26' 7"	S18"X54.7#*	6"	9' 4"	8"	3704	2PF4025
		35' 0"	30' 0"	31' 7"	S18"X54.7#*	6"	11' 2"	8"	4246	2PF4030
		35' 0"	35' 0"	36' 7"	S18"X54.7#*	6"	13' 1"	8"	4440	2PF4035

SPANCO
GANTRY CRANES

PF SERIES
All-Steel Construction
(continued)

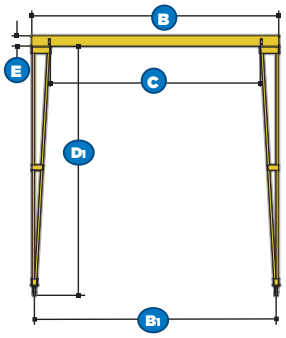

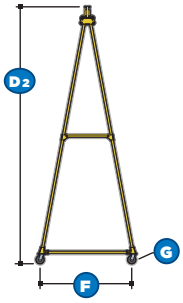

A CAPACITY	B SPAN	C CLEAR SPAN	D1 HEIGHT UNDER BEAM	D2 OVERALL HEIGHT	E1 BEAM SIZE	E2 FLANGE WIDTH	F TREAD	G CASTER DIA.	NET WT (LBS.)	MODEL
3 TON	15′	12' 0"	20' 0"	20' 10"	S10"X25.4	4-5/8"	7' 5"	8"	1378	3PF1520B
		12' 0"	25' 0"	25' 10"	S10"X25.4	4-5/8"	9' 4"	8"	2377	3PF1525B
		11' 0"	30' 0"	30' 10"	S10"X25.4	4-5/8"	11' 3"	8"	2666	3PF1530B
		11' 0"	35' 0"	35' 10"	S10"X25.4	4-5/8"	13' 1"	8"	2967	3PF1535B
	20′	17' 0"	20' 0"	21' 3"	S15"X42.9#	5-1/2"	7' 5"	8"	1855	3PF2020B
		17' 0"	25' 0"	26' 3"	S15"X42.9#	5-1/2"	9' 4"	8"	2854	3PF2025B
		16' 0"	30' 0"	31' 3"	S15"X42.9#	5-1/2"	11' 3"	8"	3193	3PF2030B
		16' 0"	35' 0"	36' 3"	S15"X42.9#	5-1/2"	13' 1"	8"	3444	3PF2035B
	25′	21' 0"	20' 0"	21' 6"	S18"X54.7#	6"	7' 5"	8"	2404	3PF2520B
		21' 0"	25' 0"	26' 6"	S18"X54.7#	6"	9' 4"	8"	3364	3PF2525B
		21' 0"	30' 0"	31' 6"	S18"X54.7#	6"	11' 3"	8"	3703	3PF2530B
		21' 0"	35' 0"	36' 6"	S18"X54.7#	6"	13' 1"	8"	3954	3PF2535B
	30′	26' 0"	20' 0"	21' 7"	S18"X54.7#*	6"	7' 5"	8"	3032	3PF3020B
		26' 0"	25' 0"	26' 7"	S18"X54.7#*	6"	9' 4"	8"	3978	3PF3025B
		26' 0"	30' 0"	31' 7"	S18"X54.7#*	6"	11' 3"	8"	4349	3PF3030B
		25' 0"	35' 0"	36' 7"	S18"X54.7#*	6"	13' 1"	8"	4558	3PF3035B
	35′	31' 0"	20' 0"	21' 7"	S18"X54.7#*	6"	7' 5"	8"	3660	3PF3520B
		31' 0"	25' 0"	26' 7"	S18"X54.7#*	6"	9' 4"	8"	4593	3PF3525B
		31' 0"	30' 0"	31' 7"	S18"X54.7#*	6"	11' 3"	8"	4995	3PF3530B
		30' 0"	35' 0"	36' 7"	S18"X54.7#*	6"	13' 1"	8"	5163	3PF3535B
	40′	35' 0"	20' 0"	21' 7"	S18"X54.7#*	6"	7' 5"	8"	4288	3PF4020B
		35' 0"	25' 0"	26' 7"	S18"X54.7#*	6"	9' 4"	8"	5207	3PF4025B
		35' 0"	30' 0"	31' 7"	S18"X54.7#*	6"	11' 3"	8"	5641	3PF4030B
		35' 0"	35' 0"	36' 7"	S18"X54.7#*	6"	13' 1"	8"	5767	3PF4035B

A CAPACITY	B SPAN	C CLEAR SPAN	D1 HEIGHT UNDER BEAM	D2 OVERALL HEIGHT	E1 BEAM SIZE	E2 FLANGE WIDTH	F TREAD	G CASTER DIA.	NET WT (LBS.)	MODEL
5 TON	15′	12' 0"	20' 0"	21' 3"	S15"X42.9#	5-1/2"	7' 6"	8"	2335	5PF1520B
		12' 0"	25' 0"	26' 3"	S15"X42.9#	5-1/2"	9' 4"	8"	2640	5PF1525B
		11' 0"	30' 0"	31' 3"	S15"X42.9#	5-1/2"	11' 2"	8"	2980	5PF1530B
		11' 0"	35' 0"	36' 3"	S15"X42.9#	5-1/2"	13' 1"	8"	3280	5PF1535B
	20′	17' 0"	20' 0"	21' 6"	S18"X54.7#	6"	7' 6"	8"	2785	5PF2020B
		17' 0"	25' 0"	26' 6"	S18"X54.7#	6"	9' 4"	8"	3090	5PF2025B
		16' 0"	30' 0"	31' 6"	S18"X54.7#	6"	11' 2"	8"	3430	5PF2030B
		16' 0"	35' 0"	36' 6"	S18"X54.7#	6"	13' 1"	8"	3730	5PF2035B
	25′	21' 0"	20' 0"	21' 7"	S18"X54.7#*	6"	7' 6"	8"	3344	5PF2520B
		21' 0"	25' 0"	26' 7"	S18"X54.7#*	6"	9' 4"	8"	3649	5PF2525B
		21' 0"	30' 0"	31' 7"	S18"X54.7#*	6"	11' 2"	8"	3989	5PF2530B
		20' 0"	35' 0"	36' 7"	S18"X54.7#*	6"	13' 1"	8"	4269	5PF2535B
	30′	26' 0"	20' 0"	21' 7"	S18"X54.7#*	6"	7' 6"	8"	3663	5PF3020B
		26' 0"	25' 0"	26' 7"	S18"X54.7#*	6"	9' 4"	8"	3968	5PF3025B
		26' 0"	30' 0"	31' 7"	S18"X54.7#*	6"	11' 2"	8"	4308	5PF3030B
		25' 0"	35' 0"	36' 7"	S18"X54.7#*	6"	13' 1"	8"	4538	5PF3035B
	35′	31' 0"	20' 0"	21' 7"	S18"X54.7#*	6"	7' 6"	8"	4401	5PF3520B
		31' 0"	25'- 0"	26' 7"	S18"X54.7#*	6"	9' 4"	8"	4706	5PF3525B
		31' 0"	30' 0"	31' 7"	S18"X54.7#*	6"	11' 2"	8"	5051	5PF3530B
		30' 0"	35' 0"	36' 7"	S18"X54.7#*	6"	13' 1"	8"	5326	5PF3535B
	40′	35' 0"	20' 0"	22' 1"	S24"X80#*	7"	7' 6"	8"	5754	5PF4020B
		35' 0"	25' 0"	27' 1"	S24"X80#*	7"	9' 4"	8"	6059	5PF4025B
		35' 0"	30' 0"	32' 1"	S24"X80#*	7"	11' 2"	8"	6394	5PF4030B
		35' 0"	35' 0"	37' 1"	S24"X80#*	7"	13' 1"	8"	6669	5PF4035B

A CAPACITY	B SPAN	C CLEAR SPAN	D1 HEIGHT UNDER BEAM	D2 OVERALL HEIGHT	E1 BEAM SIZE	E2 FLANGE WIDTH	F TREAD	G CASTER DIA.	NET WT (LBS.)	MODEL
7½ TON	15′	12' 0"	20' 0"	21' 6"	S18"X54.7#	6"	7' 4"	12"	2653	7PF1520
		12' 0"	25' 0"	26' 6"	S18"X54.7#	6"	9' 2"	12"	2958	7PF1525
		11' 0"	30' 0"	31' 6"	S18"X54.7#	6"	11' 1"	12"	3457	7PF1530
		11' 0"	35' 0"	36' 6"	S18"X54.7#	6"	13' 0"	12"	5274	7PF1535
	20′	17' 0"	20' 0"	21' 7"	S18"X54.7#*	6"	7' 4"	12"	3125	7PF2020
		17' 0"	25' 0"	26' 7"	S18"X54.7#*	6"	9' 2"	12"	3430	7PF2025
		16' 0"	30' 0"	31' 7"	S18"X54.7#*	6"	11' 1"	12"	3959	7PF2030
		16' 0"	35' 0"	36' 7"	S18"X54.7#*	6"	13' 0"	12"	5746	7PF2035
	25′	21' 0"	20' 0"	21' 7"	S18"X54.7#*	6"	7' 4"	12"	3540	7PF2520
		21' 0"	25' 0"	26' 7"	S18"X54.7#*	6"	9' 2"	12"	3845	7PF2525
		21' 0"	30' 0"	31' 7"	S18"X54.7#*	6"	11' 1"	12"	4344	7PF2530
		20' 0"	35' 0"	36' 7"	S18"X54.7#*	6"	13' 0"	12"	6140	7PF2535
	30′	26' 0"	20' 0"	22' 1"	S24"X80#*	7"	7' 4"	12"	4301	7PF3020
		26' 0"	25' 0"	27' 1"	S24"X80#*	7"	9' 2"	12"	4606	7PF3025
		26' 0"	30' 0"	32' 1"	S24"X80#*	7"	11' 1"	12"	5148	7PF3030
		25' 0"	35' 0"	37' 1"	S24"X80#*	7"	13' 0"	12"	6901	7PF3035
	35′	31' 0"	20' 0"	22' 1"	S24"X80#*	7"	7' 4"	12"	5197	7PF3520
		31' 0"	25' 0"	27' 1"	S24"X80#*	7"	9' 2"	12"	5502	7PF3525
		31' 0"	30' 0"	32' 1"	S24"X80#*	7"	11' 1"	12"	6424	7PF3530
		30' 0"	35' 0"	37' 1"	S24"X80#*	7"	13' 0"	12"	7847	7PF3535
	40′	35' 0"	20' 0"	22' 1"	S24"X80#*	7"	7' 4"	12"	6102	7PF4020
		35' 0"	25' 0"	27' 1"	S24"X80#*	7"	9' 2"	12"	7019	7PF4025
		35' 0"	30' 0"	32' 1"	S24"X80#*	7"	11' 1"	12"	7571	7PF4030
		35' 0"	35' 0"	37' 1"	S24"X80#*	7"	13' 0"	12"	9319	7PF4035

A CAPACITY	B SPAN	C CLEAR SPAN	D1 HEIGHT UNDER BEAM	D2 OVERALL HEIGHT	E1 BEAM SIZE	E2 FLANGE WIDTH	F TREAD	G CASTER DIA.	NET WT (LBS.)	MODEL
10 TON	15′	12' 0"	20' 0"	21' 6"	S18"X54.7#	6"	7' 4"	12"	2677	10PF1520
		12' 0"	25' 0"	26' 6"	S18"X54.7#	6"	9' 2"	12"	2982	10PF1525
		11' 0"	30' 0"	31' 6"	S18"X54.7#	6"	11' 1"	12"	4652	10PF1530
		11' 0"	35' 0"	36' 6"	S18"X54.7#	6"	13' 0"	12"	5298	10PF1535
	20′	17' 0"	20' 0"	22' 0"	S24"X80#	7"	7' 4"	12"	3736	10PF2020
		17' 0"	25' 0"	27' 0"	S24"X80#	7"	9' 2"	12"	3761	10PF2025
		16' 0"	30' 0"	32' 0"	S24"X80#	7"	11' 1"	12"	5456	10PF2030
		16' 0"	35' 0"	37' 0"	S24"X80#	7"	13' 0"	12"	6102	10PF2035
	25′	21' 0"	20' 0"	22' 1"	S24"X80#*	7"	7' 4"	12"	4738	10PF2520
		21' 0"	25' 0"	27' 1"	S24"X80#*	7"	9' 2"	12"	5043	10PF2525
		21' 0"	30' 0"	32' 1"	S24"X80#*	7"	11' 1"	12"	6733	10PF2530
		20' 0"	35' 0"	37' 1"	S24"X80#*	7"	13' 0"	12"	7388	10PF2535
	30′	26' 0"	20' 0"	22' 1"	S24"X80#*	7"	7' 4"	12"	5041	10PF3020
		26' 0"	25' 0"	27' 1"	S24"X80#*	7"	9' 2"	12"	5346	10PF3025
		26' 0"	30' 0"	32' 1"	S24"X80#*	7"	11' 1"	12"	7036	10PF3030
		25' 0"	35' 0"	37' 1"	S24"X80#*	7"	13' 0"	12"	7691	10PF3035
	35′	31' 0"	20' 0"	22' 1"	S24"X80#*	7"	7' 4"	12"	5572	10PF3520
		31' 0"	25' 0"	27' 1"	S24"X80#*	7"	9' 2"	12"	5877	10PF3525
		30' 0"	30' 0"	32' 1"	S24"X80#*	7"	11' 1"	12"	7197	10PF3530
		30' 0"	35' 0"	37' 1"	S24"X80#*	7"	13' 0"	12"	8172	10PF3535
	40′	35' 0"	20' 0"	22' 1"	S24"X80#*	7"	7' 4"	12"	6713	10PF4020
		35' 0"	25' 0"	27' 1"	S24"X80#*	7"	9' 2"	12"	7318	10PF4025
		35' 0"	30' 0"	32' 1"	S24"X80#*	7"	11' 1"	12"	8713	10PF4030
		35' 0"	35' 0"	37' 1"	S24"X80#*	7"	13' 0"	12"	9563	10PF4035

SPANCO
GANTRY CRANES

PF SERIES
All-Steel Construction
(continued)

A CAPACITY	B SPAN	C CLEAR SPAN	D1 HEIGHT UNDER BEAM	D2 OVERALL HEIGHT	E1 BEAM SIZE	E2 FLANGE WIDTH	F TREAD	G CASTER DIA.	NET WT (LBS.)	MODEL
15 TON	15′	11' 0"	20' 0"	22' 1"	S24"X80#*	7"	7' 4"	12"†	4415	15PF1520
		11' 0"	25' 0"	27' 1"	S24"X80#*	7"	9' 2"	12"†	4859	15PF1525
		10' 0"	30' 0"	32' 1"	S24"X80#*	7"	11' 1"	12"†	5932	15PF1530
		10' 0"	35' 0"	37' 1"	S24"X80#*	7"	13' 0"	12"†	7822	15PF1535
	20′	16' 0"	20' 0"	22' 1"	S24"X80#*	7"	7' 4"	12"†	5359	15PF2020
		16' 0"	25' 0"	27' 1"	S24"X80#*	7"	9' 2"	12"†	5888	15PF2025
		15' 0"	30'- 0"	32' 1"	S24"X80#*	7"	11' 1"	12"†	6876	15PF2030
		15' 0"	35' 0"	37' 1"	S24"X80#*	7"	13' 0"	12"†	8766	15PF2035
	25′	21' 0"	20' 0"	22' 1"	S24"X80#*	7"	7' 4"	12"†	5867	15PF2520
		21' 0"	25' 0"	27' 1"	S24"X80#*	7"	9' 2"	12"†	6311	15PF2525
		20' 0"	30' 0"	32' 1"	S24"X80#*	7"	11' 1"	12"†	7375	15PF2530
		20' 0"	35' 0"	37' 1"	S24"X80#*	7"	13' 0"	12"†	9265	15PF2535
	30′	26' 0"	20' 0"	22' 1"	S24"X106#*	7-7/8"	7' 4"	12"†	7253	15PF3020
		26' 0"	25' 0"	27' 1"	S24"X106#*	7-7/8"	9' 2"	12"†	7697	15PF3025
		25' 0"	30' 0"	32' 1"	S24"X106#*	7-7/8"	11' 1"	12"†	8761	15PF3030
		25' 0"	35' 0"	37' 1"	S24"X106#*	7-7/8"	13' 0"	12"†	10651	15PF3035
	35′	31' 0"	20' 0"	22' 1"	S24"X106#*	7-7/8"	7' 4"	12"†	8175	15PF3520
		30' 0"	25' 0"	27' 1"	S24"X106#*	7-7/8"	9' 2"	12"†	8629	15PF3525
		30' 0"	30' 0"	32' 1"	S24"X106#*	7-7/8"	11' 1"	12"†	9711	15PF3530
		30' 0"	35' 0"	37' 1"	S24"X106#*	7-7/8"	13' 0"	12"†	11573	15PF3535

* Capped Beam

† 2' Dual Casters

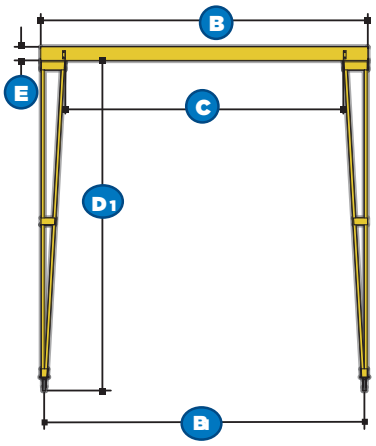

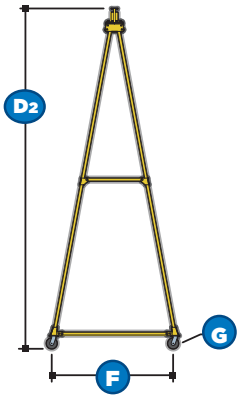

A 10-Ton Spanco PF Gantry Crane with power drive using guide angle for easy travel over a fixed route.

GANTRY CRANES
SINGLE LEG

FLOOR-MAXIMIZING DESIGNS

Spanco® Single Leg Gantry Cranes provide material handling solutions for plants that cannot fit a double leg gantry due to narrow, confined spaces or crowded machinery.

Our single leg gantry cranes maximize floor space. While one end travels along a wall or column, the other end is supported by a single leg moving along the floor.

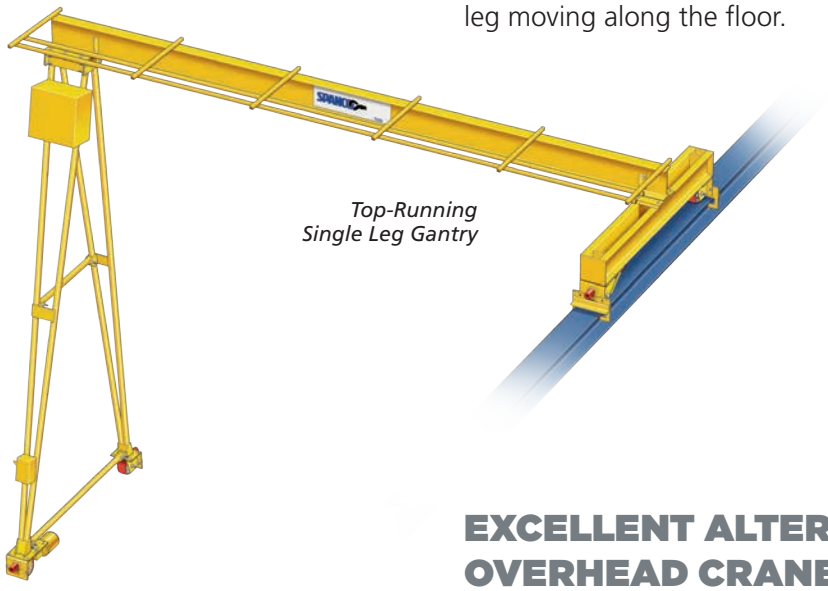

A 3-Ton Spanco Single Leg Gantry Crane with one end supported on the wall and one end traveling along the floor.

EXCELLENT ALTERNATIVE TO EXPENSIVE OVERHEAD CRANES

Spanco Semi-Gantry Cranes offer high-capacity, high-height, economical lifting solutions when:

- Your plants cannot fit a double leg PF Series Gantry due to narrow, confined spaces or crowded machinery.
- Your lifting volume is moderate and can't justify more expensive, permanently installed cranes. Our standard single leg gantry cranes are CMAA Class C Service.
- You need an economical, versatile lifting system to supplement your existing overhead cranes.

A Top-Running Single Leg Gantry Crane traveling along a ceiling-mounted runway.

SPANCO SINGLE LEG GANTRY CRANES

Semi-Gantries	Capacities	Heights Under I-Beam	Span Lengths*
Top Running	Up to 15 tons	Up to 35'	Up to 40'

**Longer custom spans available*

GANTRY CRANES
WIDE-FLANGE

CUSTOM-ENGINEERED, CLASS C & D SOLUTIONS

Made For: extra stregnth, rigidity, and durability, Spanco® Wide-Flange Gantry Cranes are custom-engineered lifting solutions for CMAA Class C or D Service, or for any application that requires a very long span.

Our wide-flange crane configurations include double or single leg gantry cranes featuring our highest capacities and spans.

Wide-Flange Gantry Cranes are ideal for applications needing:

- **Supplemental lifting systems:** to free up existing large overhead cranes.
- **Wide, clear passage:** underneath the gantry beam for machinery, vehicles, and personnel.
- **CMAA Class C, Moderate Service:** using a gantry crane that requires no floor tracks (or, for single leg designs, no guide angles). Travels directly on the floor with polyurethane-coated wheels for maximum traction and quiet operation; speeds up to 75 FPM.
- **CMAA Class D, Heavy Service:** Single or double leg gantry cranes using double-flange wheels and ASCE rail; speeds up to 75 FPM.

SPANCO WIDE-FLANGE GANTRY CRANES

Gantry Crane Type	Capacities	Heights Under I-Beam	Span Lengths*
Wide-Flange	Up to 15 tons	Up to 35′	Up to 55′

**Longer custom spans available*

WIDE-FLANGE END TRUCK DESIGNS

Spanco Wide-Flange Gantry Cranes feature end trucks that deliver smooth start-ups, stable movement, and precision wheel alignment for even transfer of power to all wheels.

- Floor-contact end trucks use large diameter tread wheels for excellent traction.
- End trucks for ASCE rail have guide rollers and anti-kick-up rollers to keep them securely aligned against both sides of the track's flange.
- Rotational axles provide easy servicing of wheels, axles, and bearings.

OPTIONS FOR WIDE-FLANGE GANTRY CRANES

- Multi-speed AC inverter drives
- Air drives
- Motor brakes
- Push-button station controls
- Warning lights, audible alarms, flood lights, or travel limit switches
- Top running end trucks for semi-gantries
- Designs for heavy service or hazardous areas
- Special paint finishes

A Motorized 5-ton Spanco Wide-Flange Single-Leg Gantry Crane with an overall span of 20 feet and 15 feet under the beam.

GANTRY CRANES
POWER DRIVE KITS

HIGH VOLUME GANTRY TRAVEL

Spanco® Power Drive Kits for our PF Series Gantry Cranes allow high-volume, high-capacity gantry travel along V-groove tracks, guide angles, or trackless paths guided by control pendants.

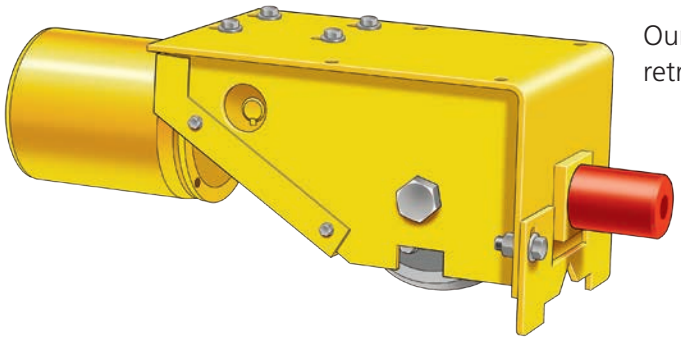

Our Power Drive Kits can be specified on new gantries or retrofitted onto an existing Spanco PF Series Gantry Crane.

Each Spanco Power Drive Kit includes

- Two drives with drive wheels and sprockets
- Chains
- Two gear reducers
- Two single-speed, 230/460V, 3-phase, TEFC motors
- Two idler assemblies
- Standard travel speed of 50 FPM; custom speeds available.
- Multi-speed AC inverter drives

Double Leg Gantry

Top-Running Single Leg Gantry

SAMPLE CONFIGURATIONS FOR DRIVES & GANTRY CRANE TRAVEL

Double Leg Gantries: This configuration demonstrates two motors driving rigid steel V-groove wheels along a fixed path. The track is an inverted steel angle welded to a flat stock for smooth granty travel.

Single Leg Gantries, Top-Running: This configuration demonstrates a top-running end truck with one end of the crane traveling overhead, and one end supported by a single leg and trackless power drive. For additional information on Spanco Single-Leg Gantry Cranes, please see page 32. .

GUIDE OPTIONS FOR POWER DRIVE KITS

- **Drive Kits for V-Tracks:** V-groove track and stops are for use with V-groove casters. Two motors drive rigid stee V-groove wheels along a fixed path. The track is an inverted steel angle welded to a flat stock. All parts are fabricated with male/female ends and fasten to floors with 3/8-inch lag bolts.
- **Drive Kits for Guide Angles:** On one side of the gantry, a motor drives polyurethane casters that are guided by a guide angle. On the other side of the gantry, a second motor drives trackless polyurethane-coated casters. The guide angle is typically installed at the base of a wall, so the rest of your floor remains free of obstacles. The kit includes guide rollers on one drive and one idler assembly. Both drive and idler come with polyurethane bumpers.
- **Drive Kits for Truly Trackless Gantry Travel:** Ideal when you need to keep your shop floor clear of any tracks or guide angles. A selector switch on the control pendant selectively turns each motor on and off to steer the gantry.

Spanco Guide Angle Drive Kit with Guide Rollers.

Additional Drive Options

- Top-running end trucks for single leg (semi-gantry) configurations; see next page for more information.
- Motor brakes
- Air-driven power drive kits
- Crane controls
- Push-button stations
- Control enclosures suitable for severe environments or hazardous areas
- Warning lights, audible alarms, or travel limit switches
- Crane wiring with rubber-covered S.O. type cable or in metal conduit
- Cable reels and electrification systems
- Festooning systems: tag line, flat cable, and box track

INDUSTRIAL
TRIPODS

MOBILE LIFT SOLUTIONS THAT CAN GO ANYWHERE

Spanco® Industrial Tripods provide mobile, heavy-lifting solutions almost anywhere — including tight spaces and outdoor locations. Your lifting is no longer limited to areas with overhead structures or access to cranes or forklifts.

For fast height adjustment, the tripod's telescoping legs are independently adjustable in 6-inch increments — which is also ideal for set-up on uneven surfaces.

The tripod's free swiveling eyebolt hangs plumb to protect the head from twists and strains, while also keeping the lifting device perfectly plumb.

Spanco Tripod Features

- Spanco Tripod can be used on all hard surfaces with our standard aluminum flat feet.
- You can also order your tripod with mud feet for soft ground. The mud feet have integral spikes to firmly entrench the legs and a Wide-Flange to prevent the legs from sinking into the ground. Order both types of interchangeable feet for maximum flexibility on all surfaces.
- Our cable lashing kit (included with all orders) keeps the tripod's legs from spreading.
- Quick, easy setup: Tripod legs conveniently fold and unfold for portability and storage; no disassembly required.
- Capacities up to 2 tons for steel and aluminum tripods.

Lifting Device Compatibility

- Frequently used with pulleys or block and tackle.
- Compatible with most 1- and 2-ton chain-mounted manual hoists.

SPANCO TRIPOD CRANES

Tripods	Capacities	Heights Under Eyebolt
Steel	1-ton or 2-ton	from 5′-2″ to 13′-9″
Aluminum	1-ton or 2-ton	from 5′-2″ to 13′-9″

**Longer custom spans available*

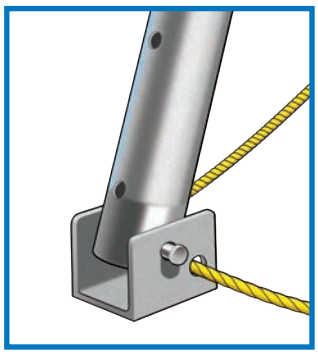

Aluminum flat feet

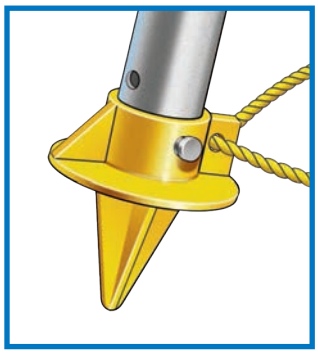

Steel mud feet

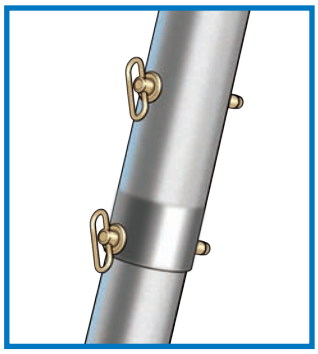

Adjustable Height

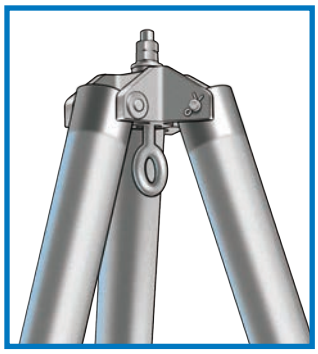

Swivling Eyebolt

A worker using a Spanco Tripod with Mud Feet to lift a manhole cover single-handedly.

Spanco Tripods are easily disassembled and transported from one job site to another

SPANCO
TRIPODS

TRIPODS

Flat Aluminum Feet (standard)

A CAPACITY	B HEIGHT: EYEBOLT TO FLOOR		C OVERALL LENGTH		F DISTANCE BETWEEN LEGS		NET WT. (LBS.)	MODEL
	Min.	*Max.*	*Min.*	*Max.*	*Min.*	*Max.*		
1-TON Steel Adjustable	8' 7"	13' 9"	10' 0"	16' 2"	9' 3"	14' 6"	220	ATS-02-1309S
1-TON Aluminum Adjustable	5' 2"	8' 7"	6' 0"	10' 0"	5' 10"	9' 2"	60	ATA-02-0805S
	6' 10"	11' 2"	8' 0"	13' 0"	7' 7"	11' 9"	70	ATA-02-1107S
	8' 7"	13' 9"	10' 2"	16' 2"	9' 3"	14' 6"	140	ATA-02-1309S
2-TON Steel Adjustable	8' 7"	13' 9"	10' 0"	16' 2"	9' 3"	14' 6"	220	ATS-04-1309S
2-TON Aluminum Adjustable	6' 10"	11' 2"	8' 0"	13' 0"	7' 7"	11' 9"	120	ATA-04-1107S
	8' 7"	13' 9"	10' 2"	16' 2"	9' 3"	14' 6"	140	ATA-04-13095S

Mud Feet (for soft ground)

A CAPACITY	B HEIGHT: EYEBOLT TO FLOOR		C OVERALL LENGTH		F DISTANCE BETWEEN LEGS		NET WT. (LBS.)	MODEL
	Min.	*Max.*	*Min.*	*Max.*	*Min.*	*Max.*		
1-TON Steel Adjustable	8' 7"	13' 9"	10' 0"	16' 2"	9' 3"	14' 6"	220	ATS-02-1309M
1-TON Aluminum Adjustable	5' 2"	8' 7"	6' 0"	10' 0"	5' 10"	9' 2"	60	ATA-02-0805M
	6' 10"	11' 2"	8' 0"	13' 0"	7' 7"	11' 9"	70	ATA-02-1107M
	8' 7"	13' 9"	10' 2"	16' 2"	9' 3"	14' 6"	140	ATA-02-1309M
2-TON Steel Adjustable	8' 7"	13' 9"	10' 0"	16' 2"	9' 3"	14' 6"	220	ATS-04-1309M
2-TON Aluminum Adjustable	6' 10"	11' 2"	8' 0"	13' 0"	7' 7"	11' 9"	120	ATA-04-1107M
	8' 7"	13' 9"	10' 2"	16' 2"	9' 3"	14' 6"	140	ATA-04-1309M

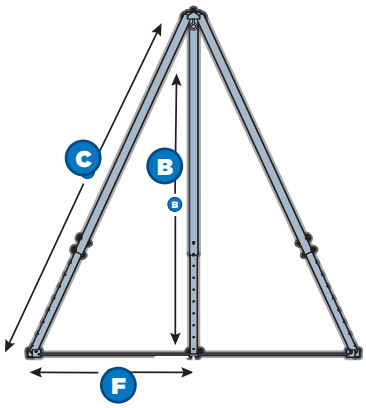

BEST WARRANTY IN THE INDUSTRY

The Ten-Year Spanco Warranty

Products covered under the Ten-Year Warranty:

- Manual Steel Freestanding, Ceiling Mounted Workstation Bridge Cranes, and Monorails
- Manual Aluminum (Alu-Track®) Workstation Bridge Cranes and Monorails
- Manual Jib Cranes (I-Beam, Articulating, and Workstation Jib Cranes)
- Manual Gantry Cranes and Tripods

What the Ten-Year Warranty covers:

- Defects in equipment material and workmanship
- Wearable parts (workstation bridge crane end trucks and hoist trolley wheels only)

Spanco, Inc. warrants its manual workstation bridge crane products, jib crane products, and gantry crane products to be free from defects in material and workmanship for a period of ten (10) years or 20,000 hours, commencing on the date of shipment to the first retail purchaser. This warranty extends to non-wearable parts only, with the exception of the wheels supplied on manually operated workstation end trucks and hoist trolleys. This warranty does not cover defective equipment or system failure caused by misuse, negligence, improper installation or maintenance, or equipment that has been used in excess of its rated capacity or beyond its service factors. It does not apply to equipment that has been altered without Spanco's written authorization.

Written notice of any claimed system defect must be given to Spanco within thirty days of discovery. Spanco's obligation under this warranty is limited to the replacement or repair of Spanco's products at the factory or separate location approved by Spanco. The purchaser is responsible for all freight and transportation costs relating to equipment repair or replacement. **Other than the abovementioned warranty, Spanco, Inc. will not honor any other warranties – whether express, implied, or statutory–and disclaims any warranties of merchantability or fitness for a particular purpose.**

Spanco is not liable – under any circumstances – for any indirect, incidental, or consequential damages including but not limited to lost profits, increased operating costs, or loss of production. This warranty does not extend to components or accessories not manufactured by Spanco. The purchaser's remedy for such components and accessories will be determined by the terms and conditions of any the warranty provided by the manufacturer of such components and accessories.

NOTE: All motorized Spanco products come with a One-Year Warranty on drive components.

SPANCO FAMILY OF
LIFTING SOLUTIONS

Lightweight and portable Aluminum Gantry Cranes

Versatile Steel Gantry Cranes

Ceiling-Mounted Workstation Bridge Cranes

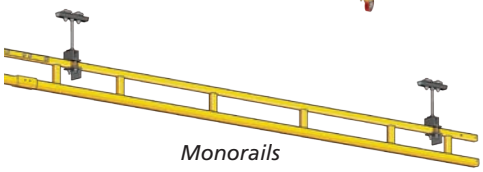

Monorails

Wall-Mounted Jib Cranes

Freestanding Jib Cranes

Freestanding Workstation Bridge Cranes

To learn more about Spanco's full line of material handling products, including Jib Cranes, Gantry Cranes, and Workstation Bridge Cranes, please visit ***Spanco.com*** from your desktop computer or mobile device.

GANTRY CRANES
NEXT STEP

Our engineering department stands ready to help you or your qualified engineer address any and all challenging applications. If you have any questions regarding the installation, operation, or maintenance of your gantry crane, call us at 800-869-2080.

To find your local sales rep, visit ***Spanco.com*** or call us at ***800-869-2080***. We'll connect you with the most qualified local Spanco dealer for your application. Your dealer will gladly review your needs in-person and make expert recommendations. We stand ready to deliver on our Promise to Perform.

SPANCO® Inc.
Promise to perform.

604 Hemlock Road
Morgantown, PA 19543 USA
info@Spanco.com ▪ Spanco.com

USA/Canada: 1-800-869-2080
Local Phone: 610-286-7200
Mexico: 95-800-270-1080

©2015 Spanco®, Inc. All rights reserved. All specifications and product designs subject to change without notice. All trademarks are the sole property of their respective owners.

SP-GC-BR0414V1